KORG

SV-1

STAGE VINTAGE PIANO

SERVICE MANUAL

Target Specification

Keybed	88 Keys/ Korg RH3 - 73 keys / Korg RH3 (E-E)
Sound Engine	TG01 (EDS)
Max Voice Polyphony	80 Voice (New Polyphony Alghorithm)
Wave Memory	256MB = 512MB 16bit/Linear converted
Sounds	36 presets : 6 Banks x 6 Variations
Bank1	E. Piano1: Rhodes (four types), FM piano, E.Piano/Pad
Bank2	E.Piano2: Wurlitzer (two types), Yamaha CP80, KorgSG-1D, Korg M1, Roland MKS-20
Bank3	Clavinet: D6 (four types), Honher Pianet, RMI ElectraPiano,
Bank4	Piano: G.Piano 1, G.Piano2, Upright, Piano/Strings, Piano/Pad, Piano/FM
Bank5	Organ: Jazz, Rock, Full, Lowrey, Farfisa, Vox
Bank6	Other: Full Strings, Solina Strings, Mellotron Strings, Dynamic Choir, Mellow Brass, Sharp Brass
Favorites	8 Favourite switches
Effects	8 slots
Pre Efx	Compressor, Boost, U-Vibe, Vibrato, Tremolo, VoxWah
Amp Models	Amp1/2/3/4/5/6
	Cabinet Models - Valve reactor Technology - 12AX7 (ECC83) valve
Modulator	Chorus1, Chorus2, Phaser1, Phaser2, Flanger, Rotary
Reverb/Delay	Room, Plate, Hall, Spring, Tape Echo, Stereo Delay
Equalizer	Bass, Mid, Treble
Total Efx	Stereo Mastering Limiter
Effect Controllers	
Pre Efx	2 switches: On/Off, Auto/Pedal Switch for "Wah" - 3 Encoders: Type select, Speed, Intensity
Modulator	2 switches: On/Off, Rotary Slow/Fast - 3 Encoders: Type select, Speed, Intensity
Reverb/Delay	2 switches : On/Off, Tap Tempo - 2 Encoders: Type select, Depth
Amp Models	On/Off - 2 Encoders: Type select, Drive
Equalizer	On/Off - 3 Encoders: Bass, Mid, Treble
Other Controllers	
Panel Switches	Transpose, Local Off, Touch, Function - Demo = Transpose+Local
Volume	Master Volume Knob
Connectors/Terminals	
MIDI	In / Out
Headphones	1 (On the front panel)
Outputs	L, R (XLR : Balanced)
	L/Mono, R (Jack : Unbalanced)
Inputs	L/Mono, R
USB	to Host
Damper Pedal	Footswitch or analog with auto-detect
Sostenuto Pedal	Footswitch with polarity auto-detect
Soft - Expression/Wah Pedal	Analog/Footswitch with Auto-detect
Accessories	Music Stand
	Damper pedal (Korg DSH2)
	Power Cable
	Bonus software : SV1 Sound Editor (Windows/Mac)
Option	Carrying Case with Keyboard stand
	XVP10 Expression/Volume Pedal
	EXP2 Expression Pedal

SV-1 (73keys) FULL VIEW

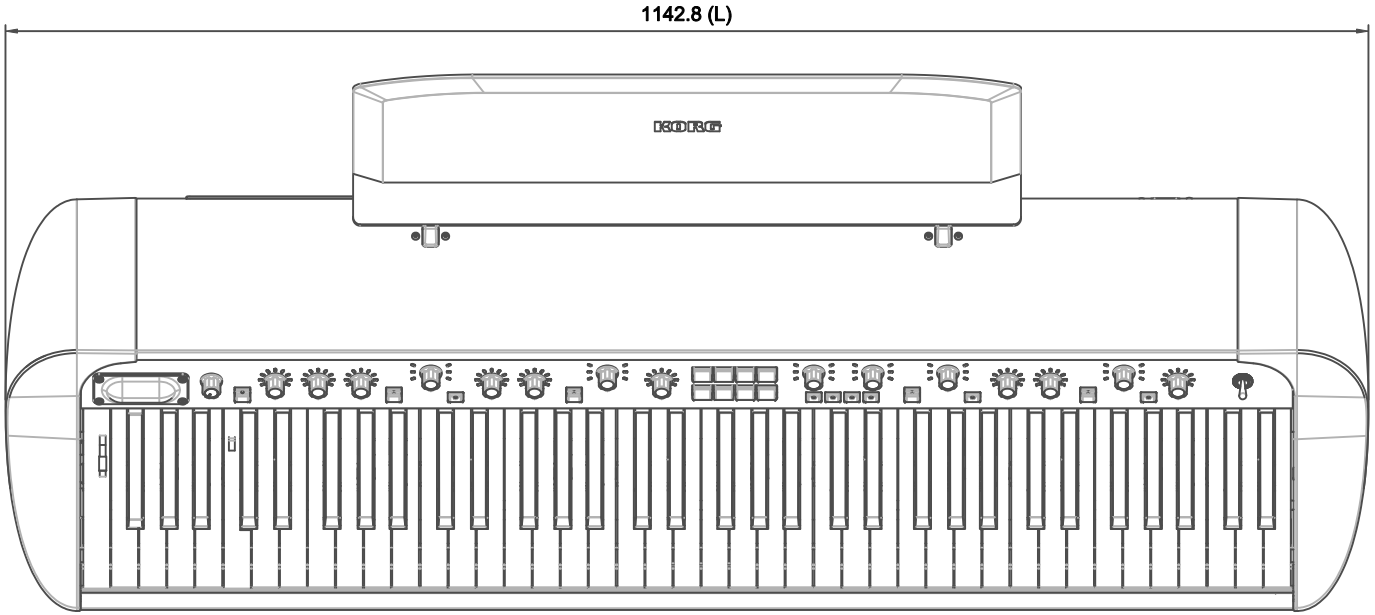

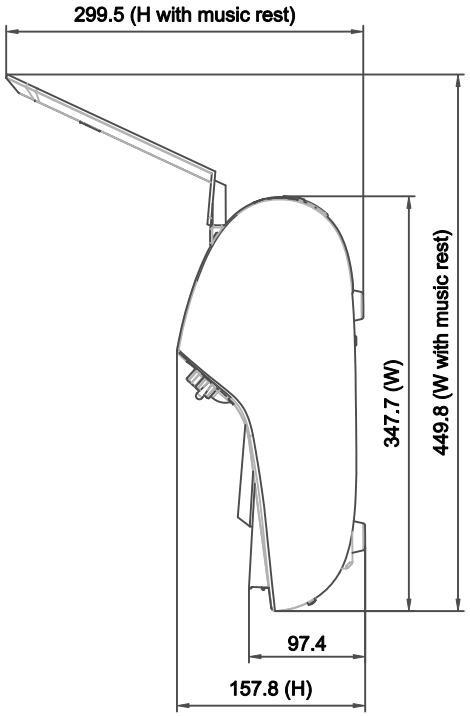

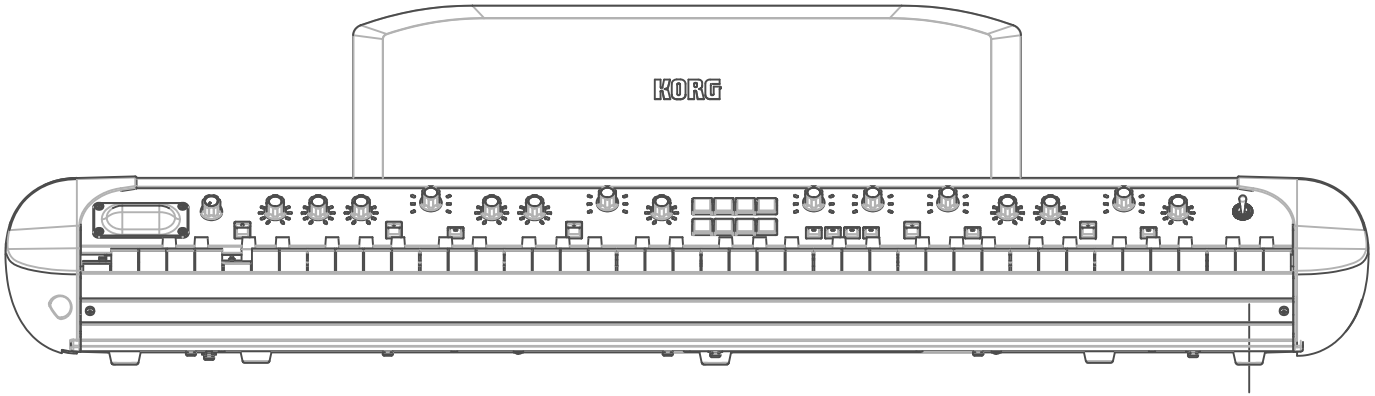

L = 1142.8mm

W= 347.7mm

W (with music rest) = 449.8mm

H = 157..8mm

H (with music rest) = 299.5mm

WEIGHT = 17,5kg

SV-1 (88keys) FULL VIEW

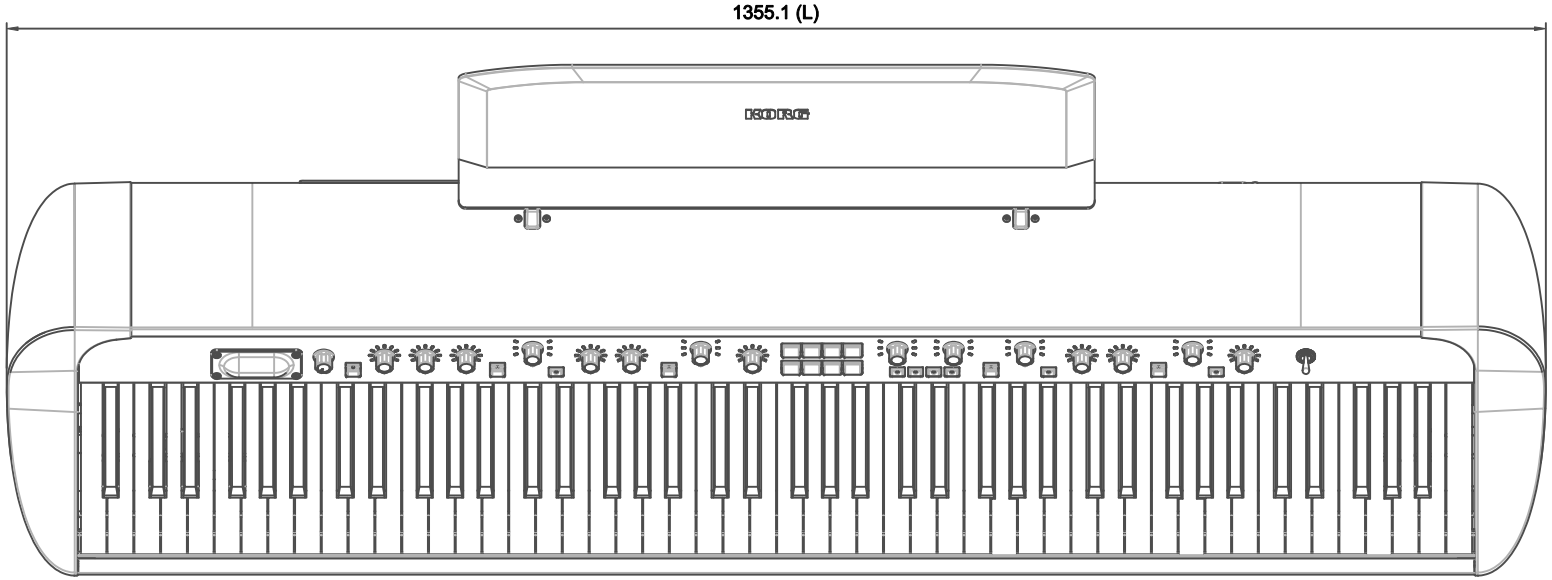

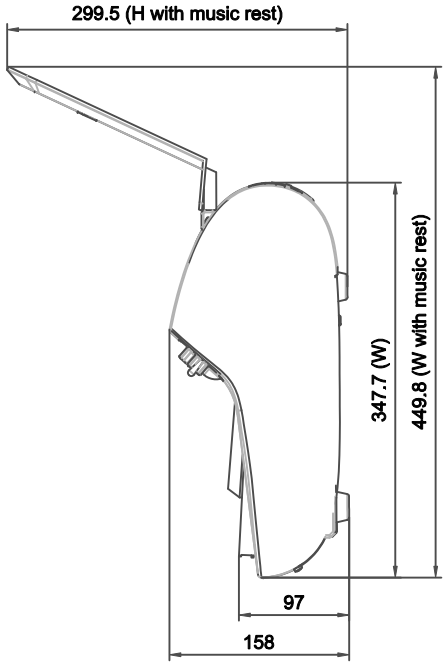

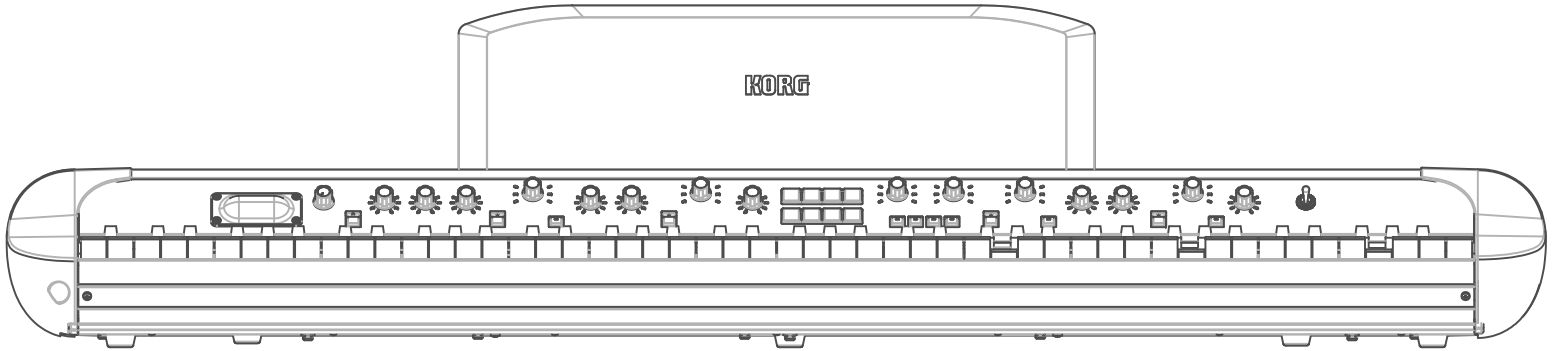

L = 1355.1mm

W= 347.7mm

W (with music rest) = 449.8mm

H = 158mm

H (with music rest) = 299.5mm

WEIGHT = 20,55kg

DISASSEMBLY 1 (73 keys)

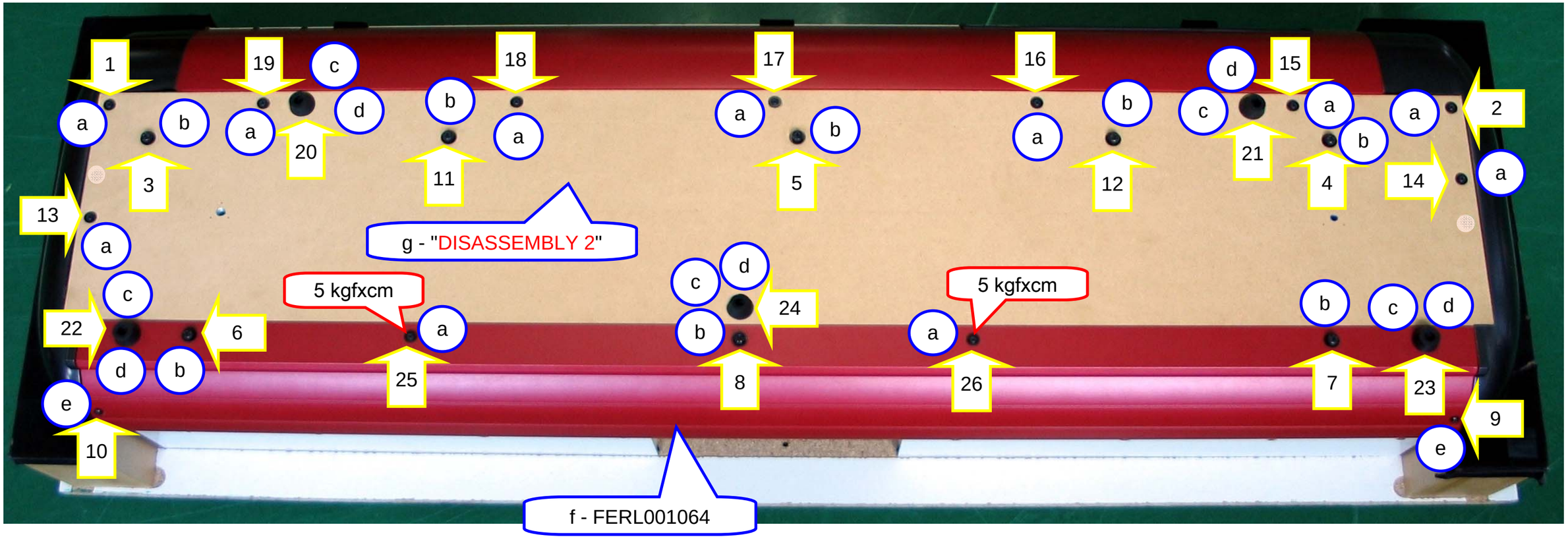

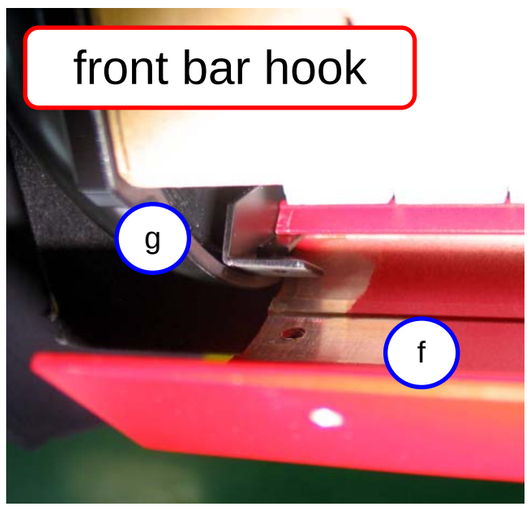

a - VTA0010053 15 kgfxcm

b - VTA0010054 15 kgfxcm

d - VTA8001093 5 kgfxcm

c - PLA0001163

e - VTA8001087 15 kgfxcm

n = Tightening sequence

DISASSEMBLY 1 (88 keys)

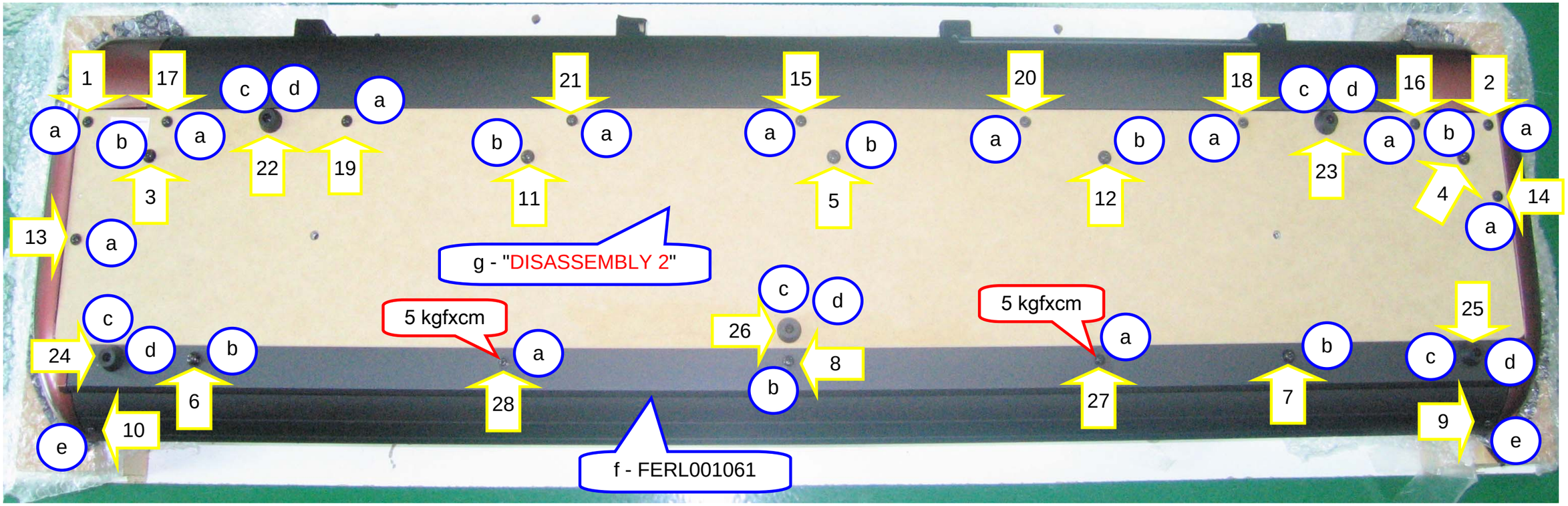

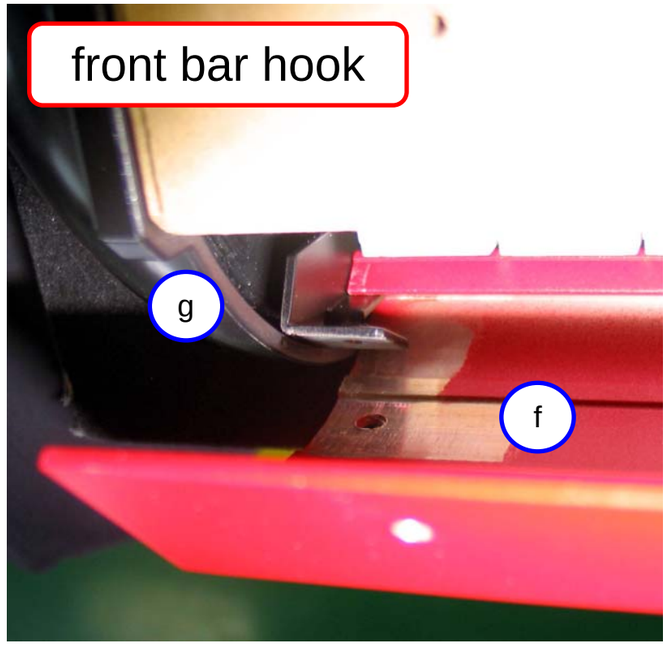

a - VTA0010053 15 kgfxcm

b - VTA0010054 15 kgfxcm

d - VTA8001093 5 kgfxcm

c - PLA0001163

e - VTA8001087 15 kgfxcm

n = Tightening sequence

DISASSEMBLY 2

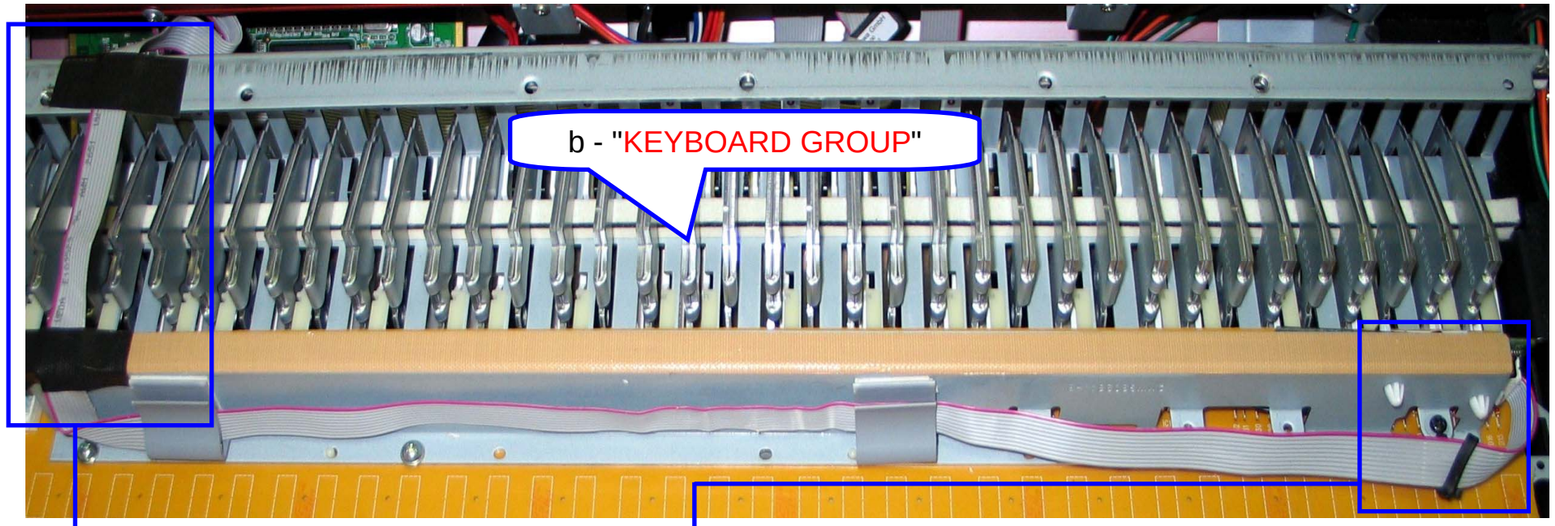

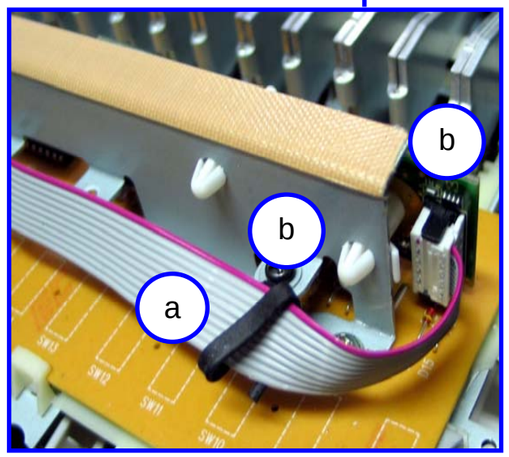

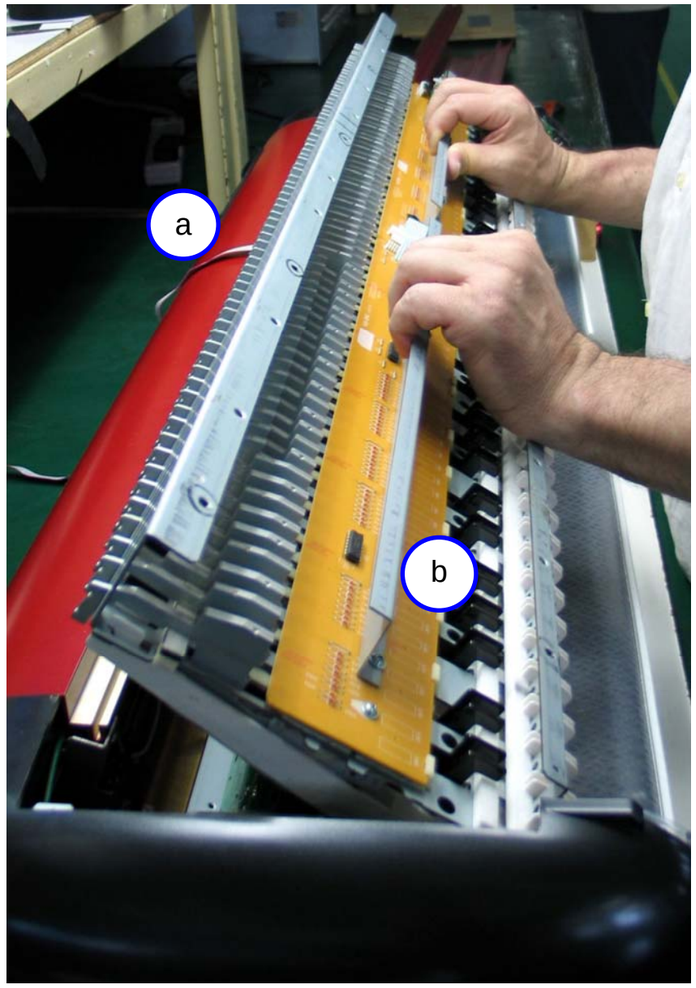

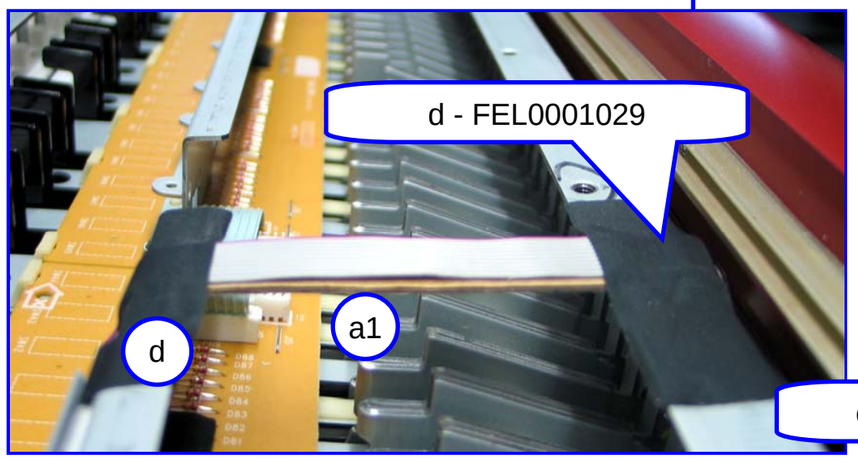

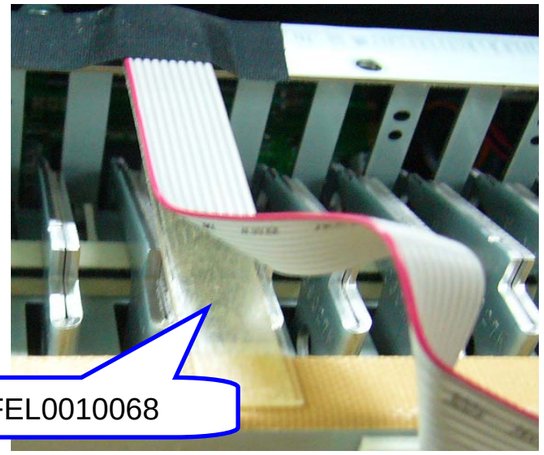

DISASSEMBLY 3 (73 keys)

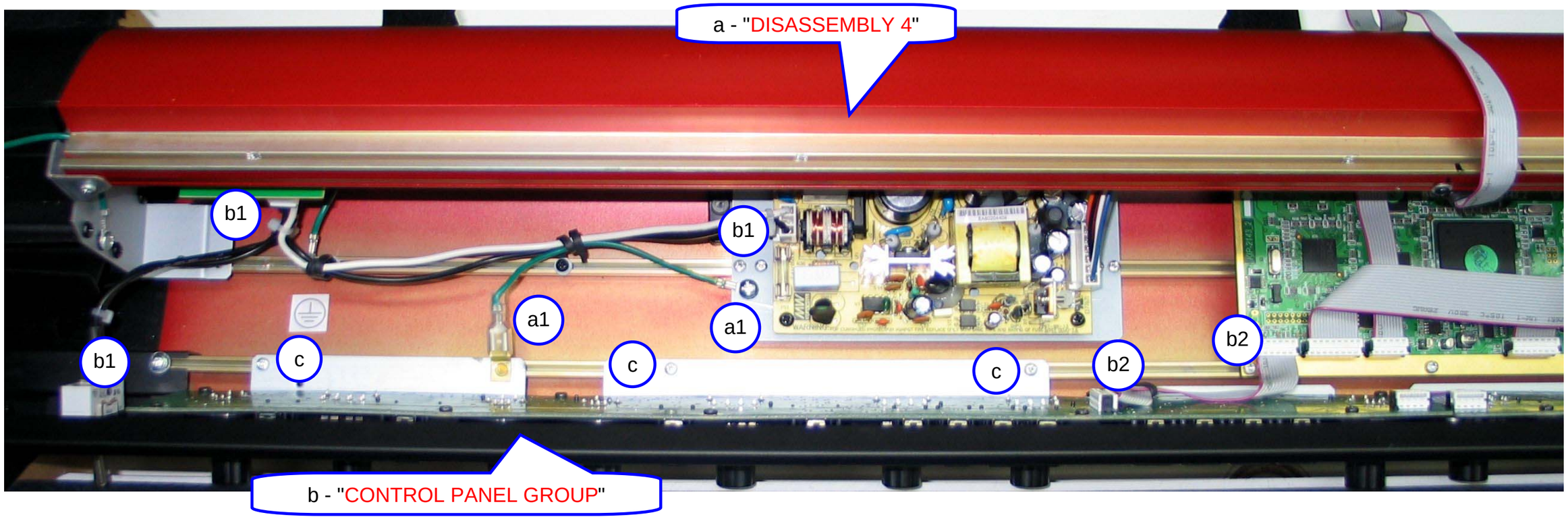

c - VTA8001050 8 kgfxcm

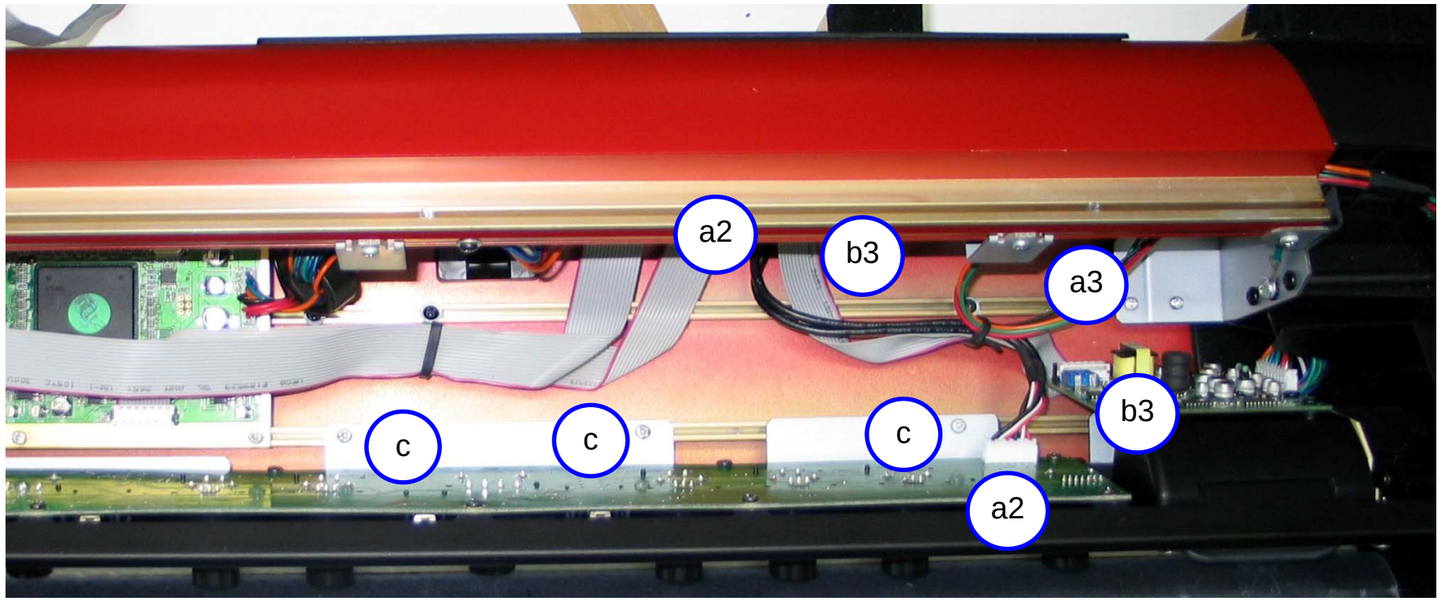

DISASSEMBLY 3 (88 keys)

a - "DISASSEMBLY 4"

b1 b1 a1 a1 c c c c c b2 b2

b - "CONTROL PANEL GROUP"

c - VTA8001050 8 kgfxcm

b3 a2 a2 b3 c c c

DISASSEMBLY 4

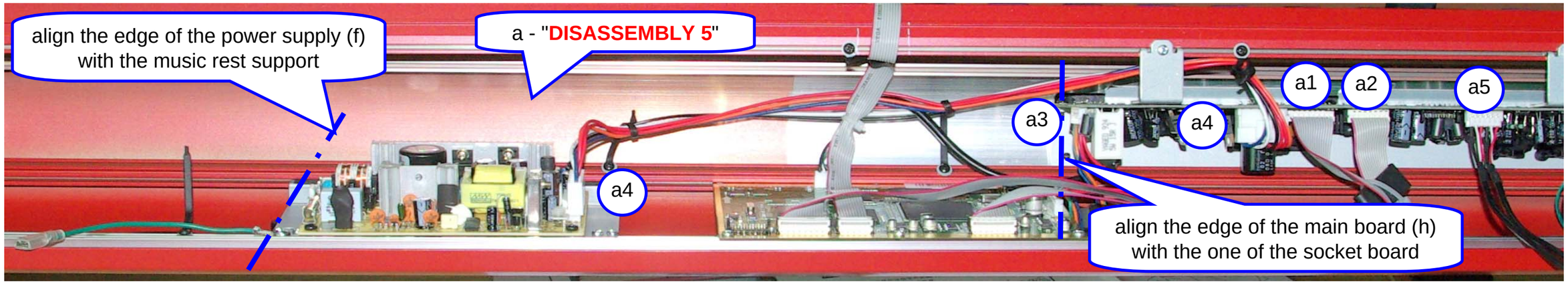

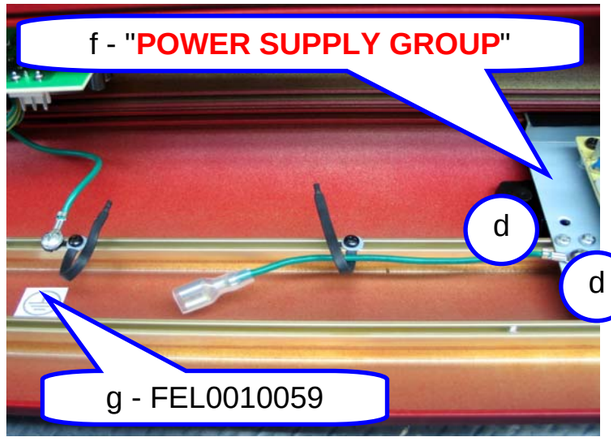

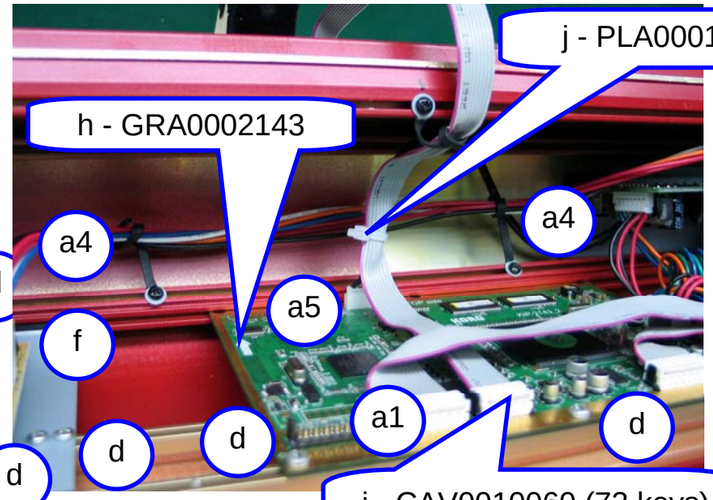

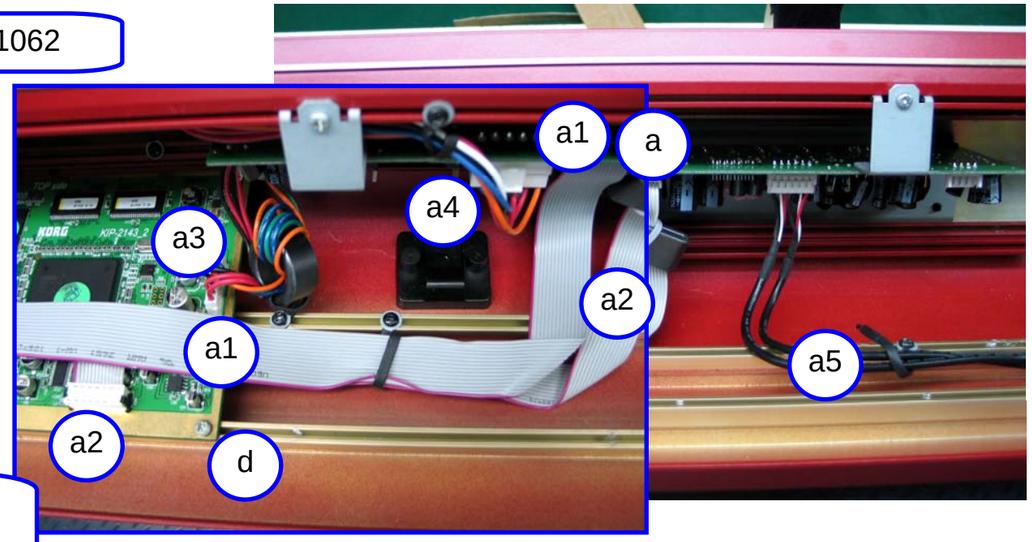

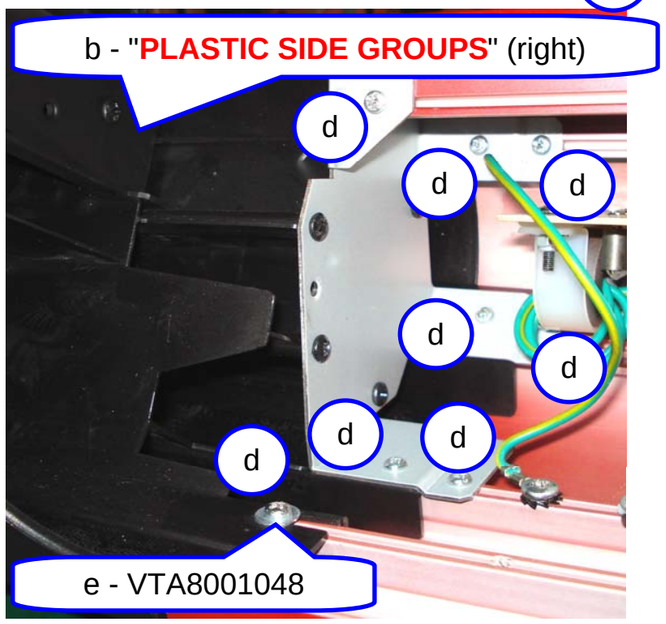

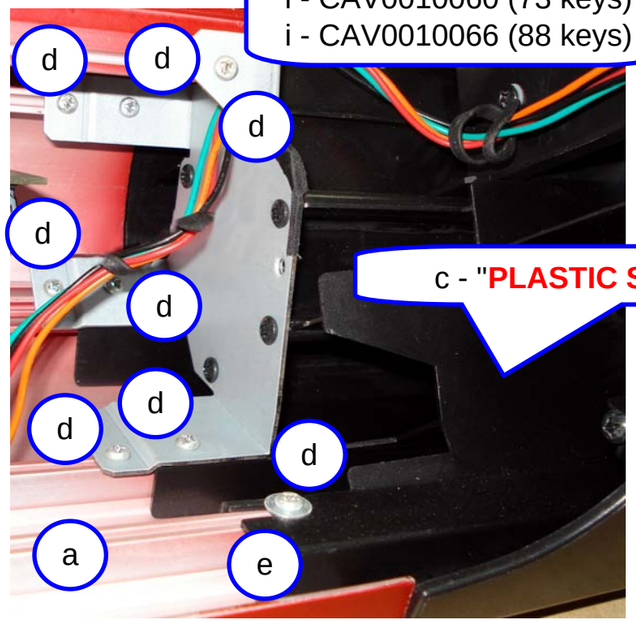

d - VTA8001038 8 kgfxcm

DISASSEMBLY 5 (73 keys)

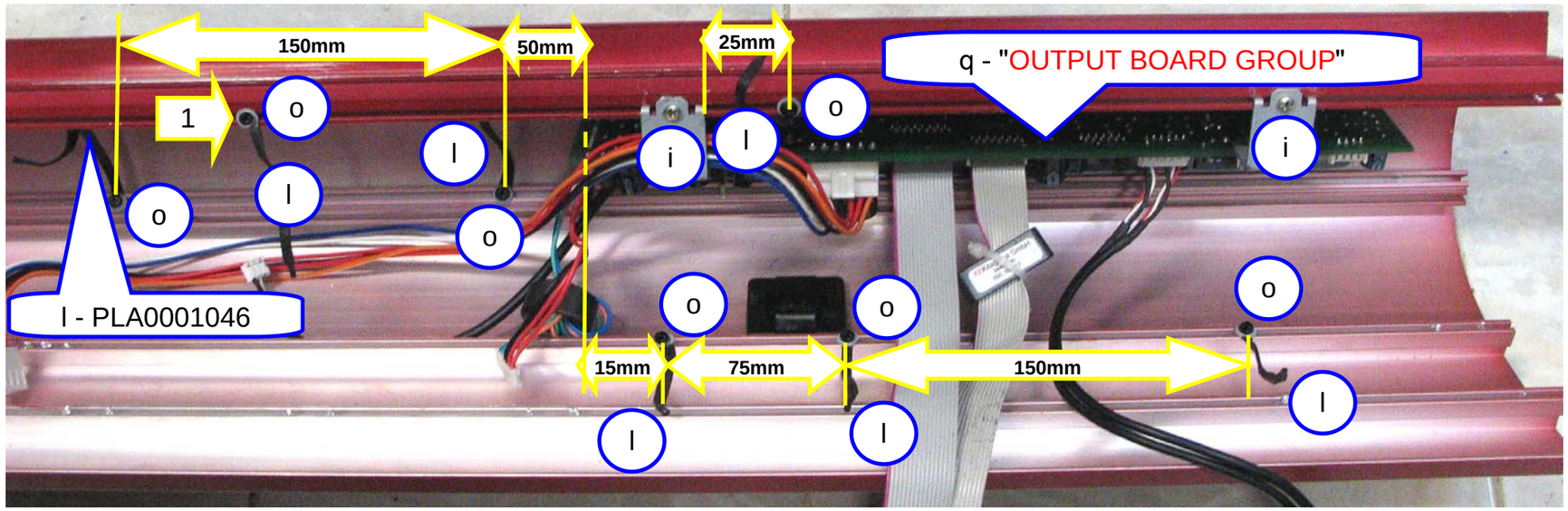

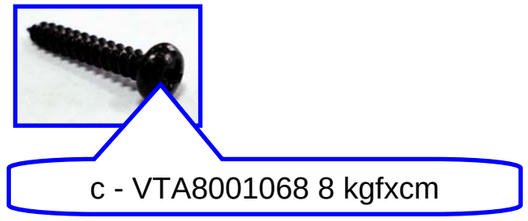

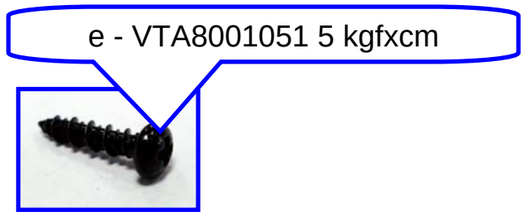

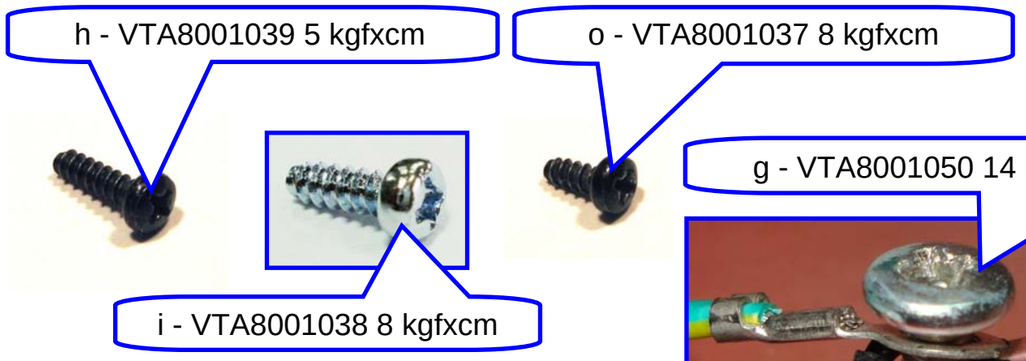

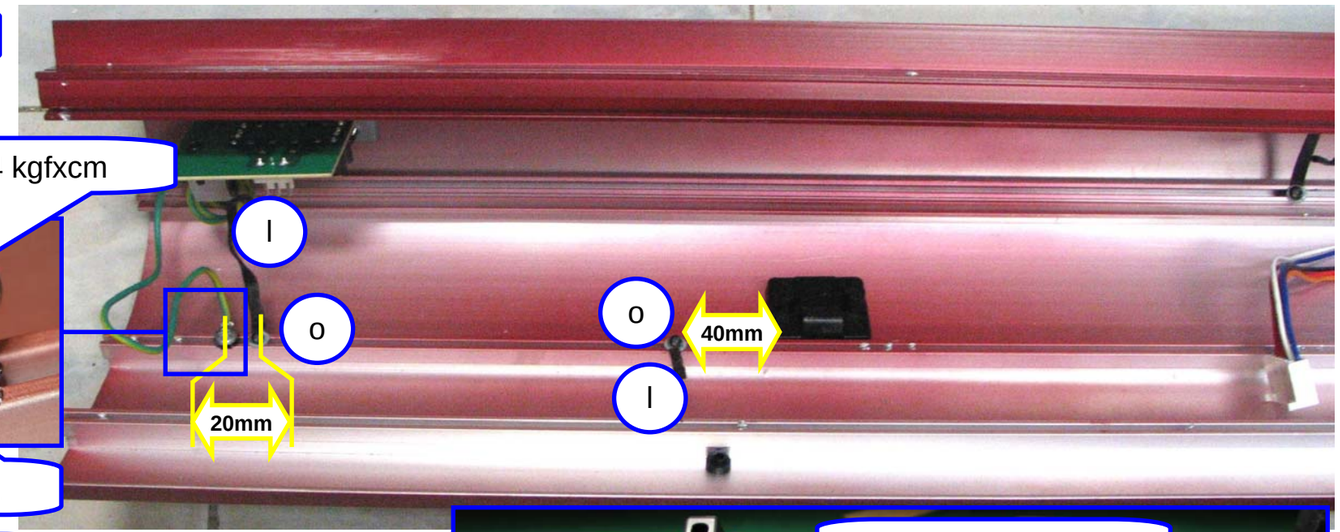

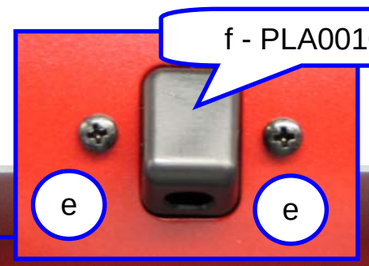

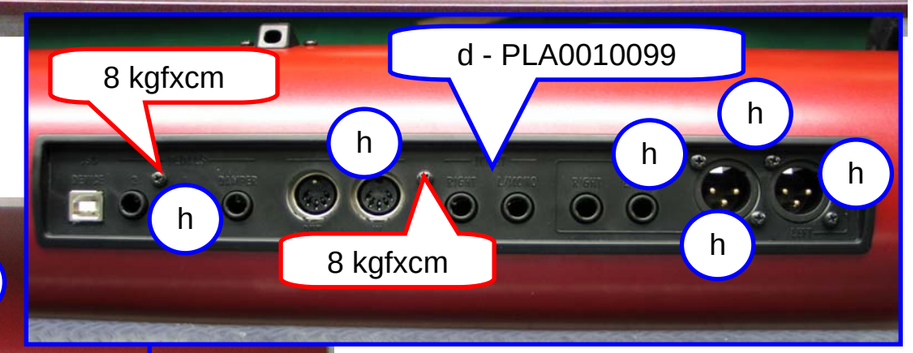

DISASSEMBLY 5 (88 keys)

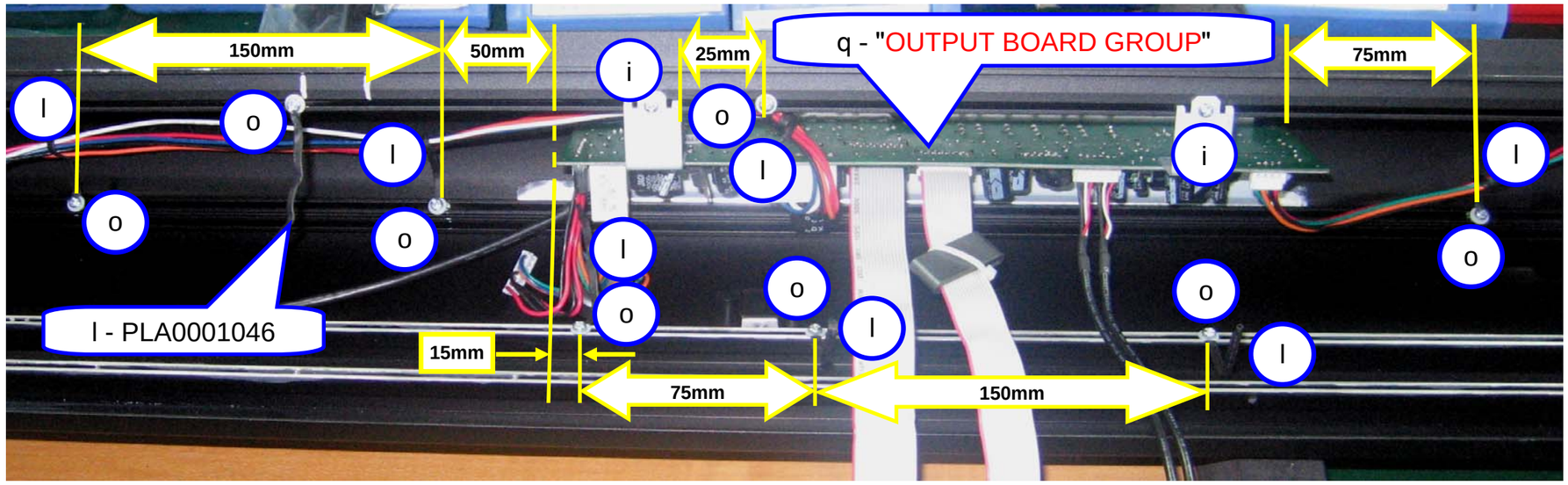

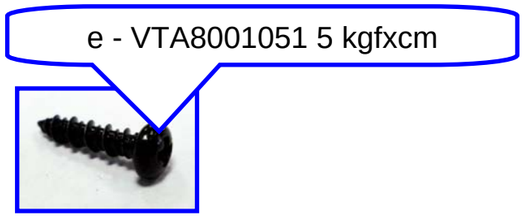

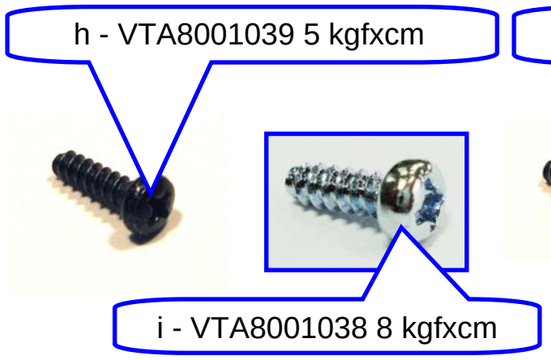

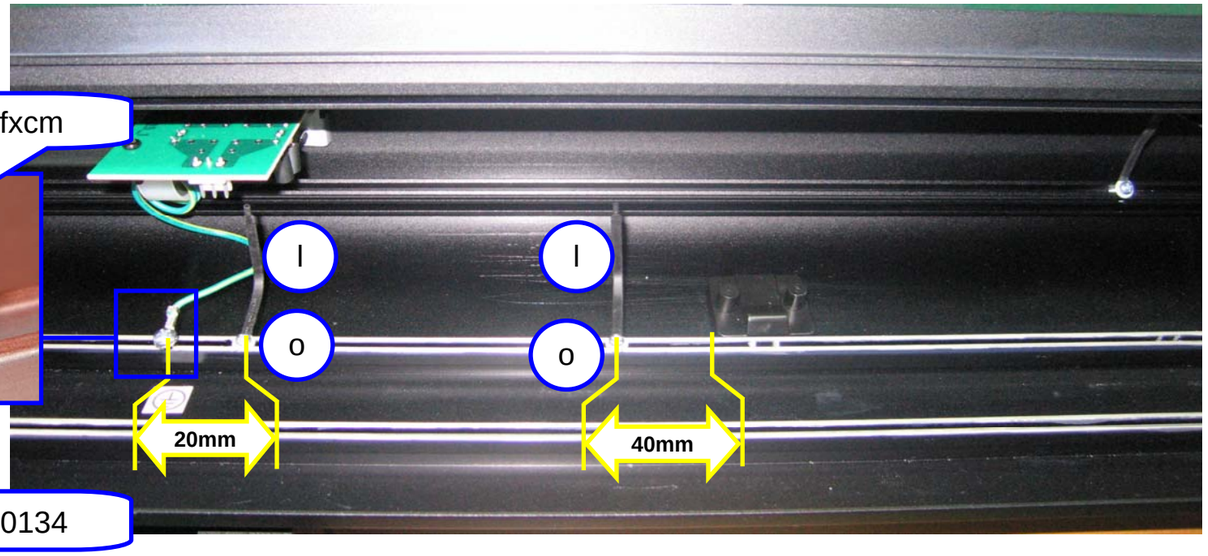

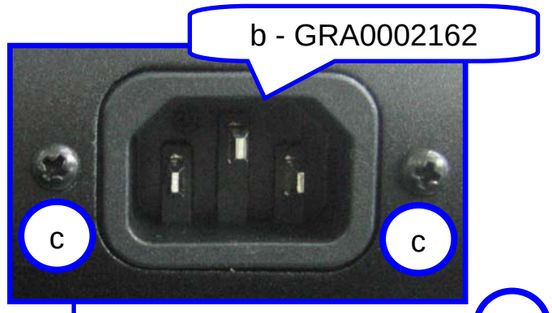

d - PLA0010099

a - FERL001062

j - FERL001069

CONTROL PANEL GROUP 1

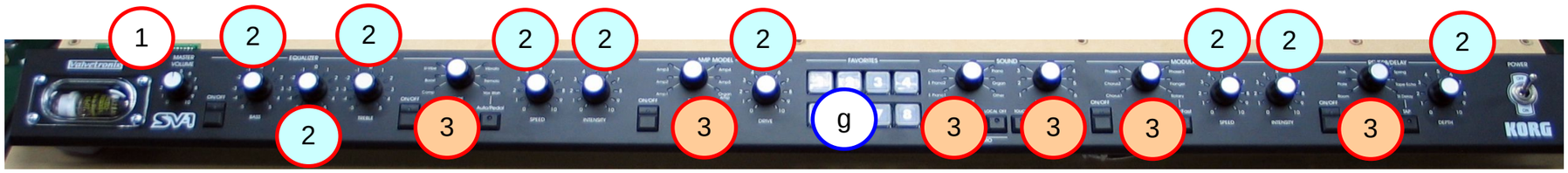

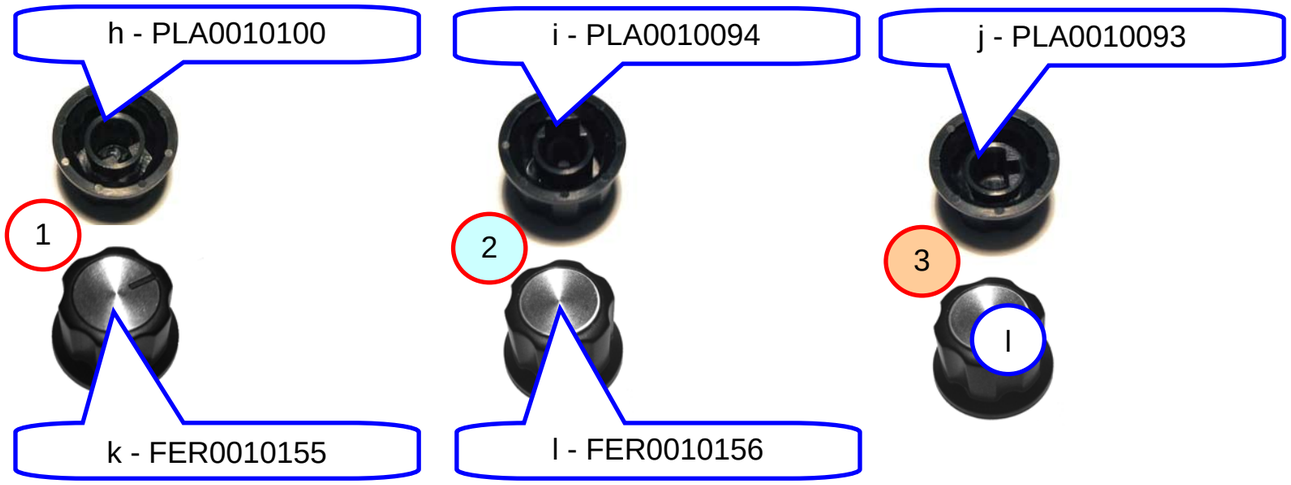

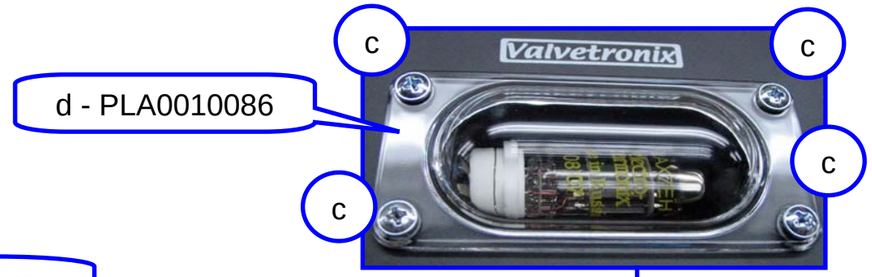

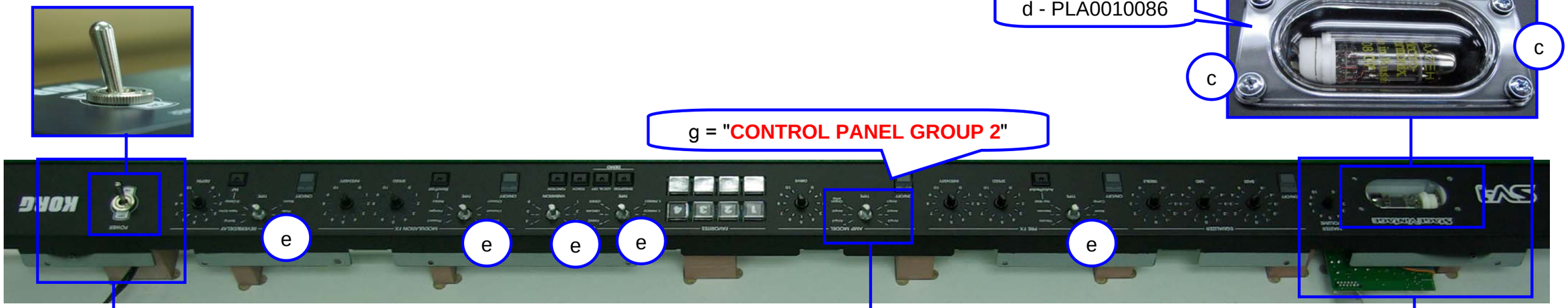

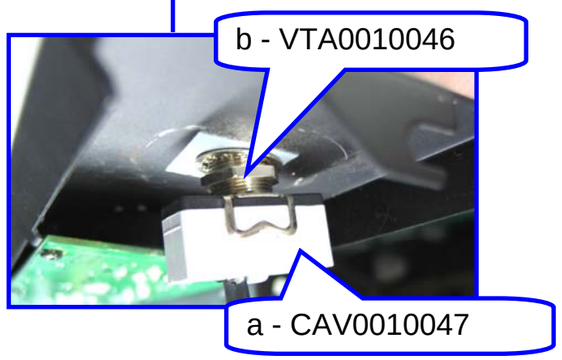

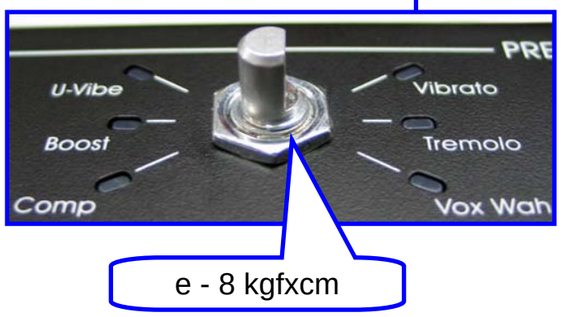

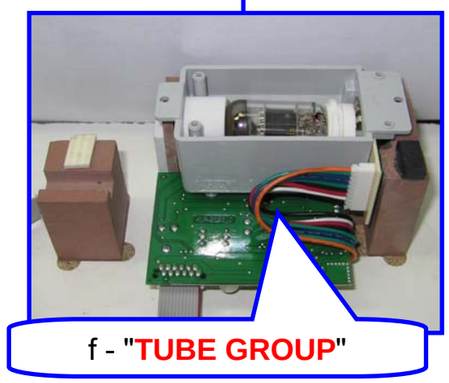

CONTROL PANEL 2

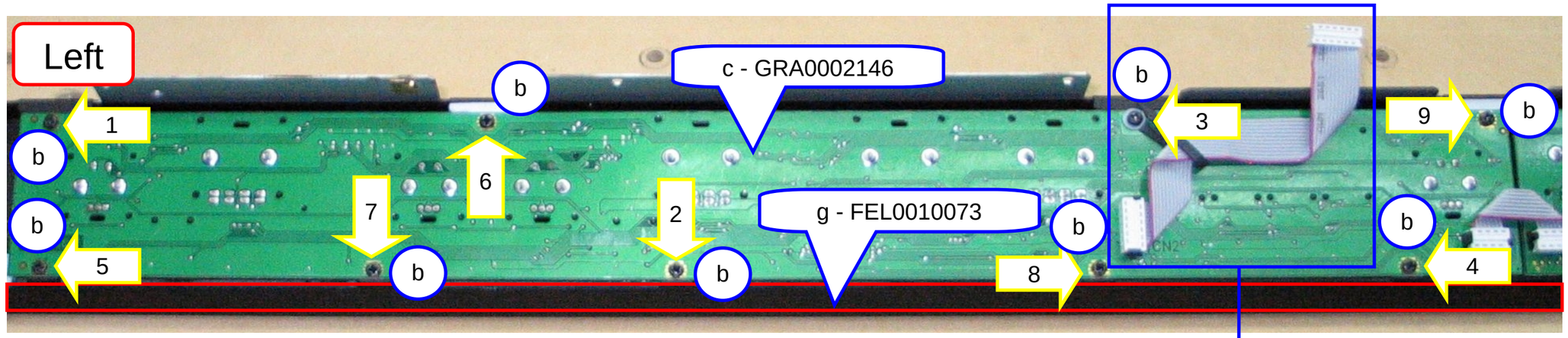

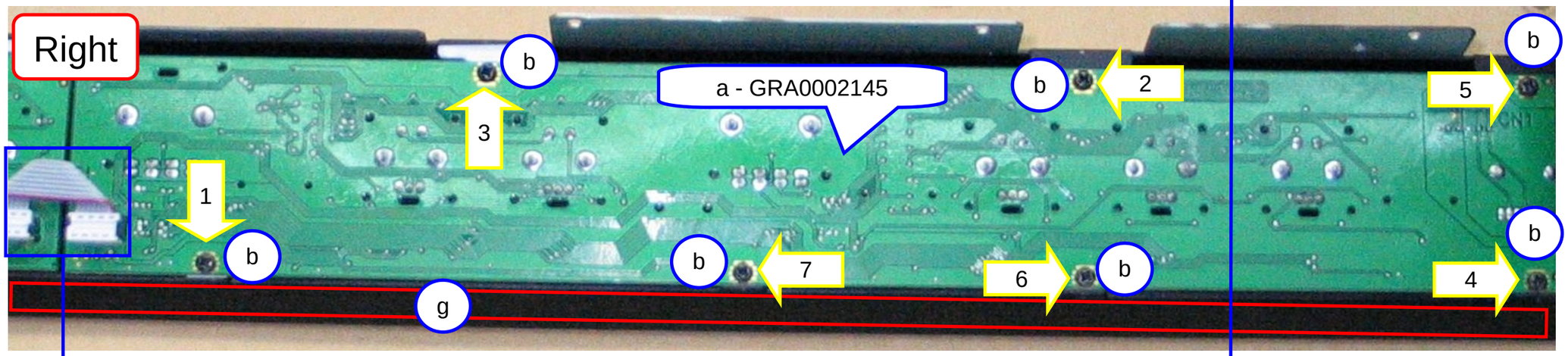

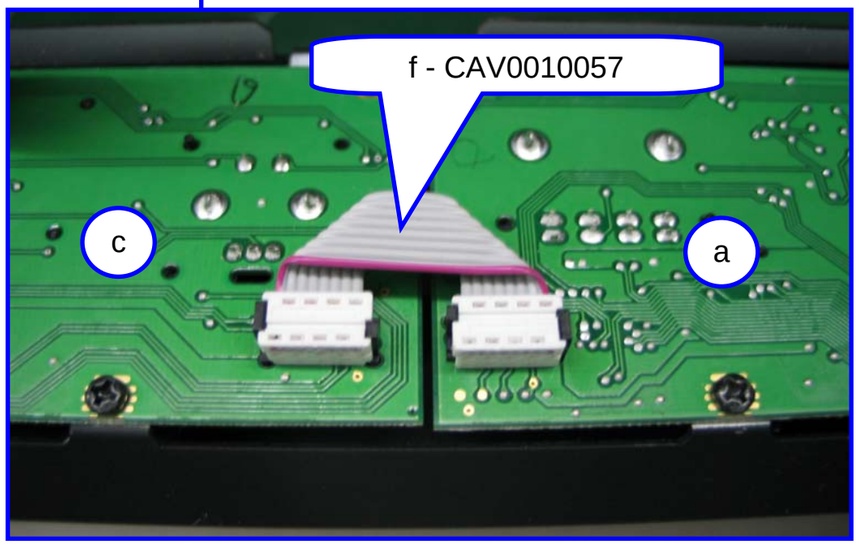

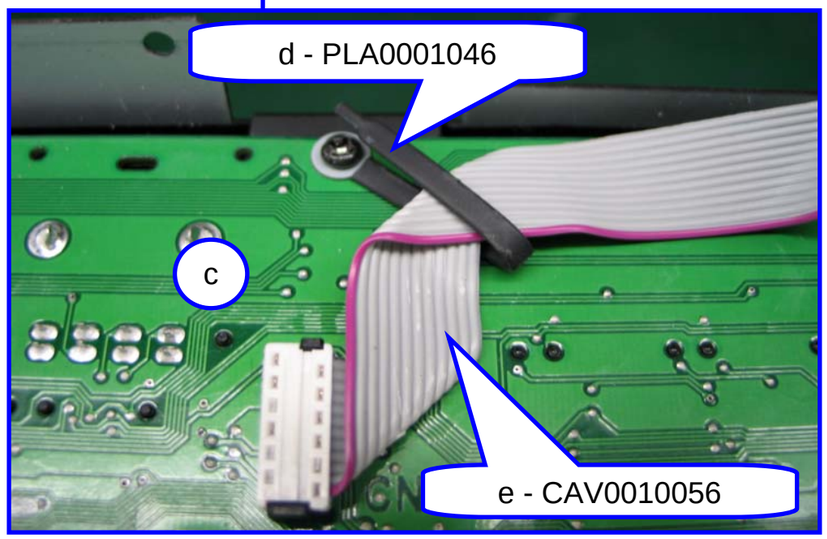

n = Tightening sequence

CONTROL PANEL GROUP 3

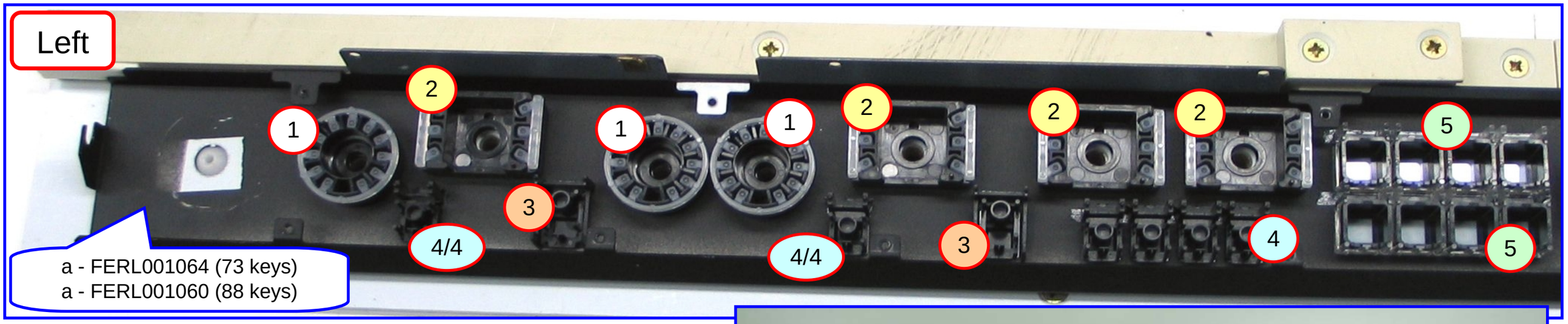

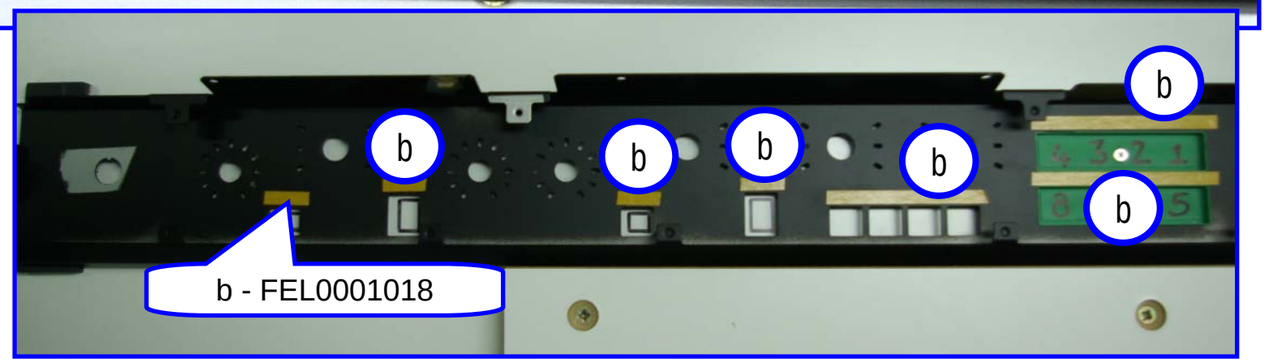

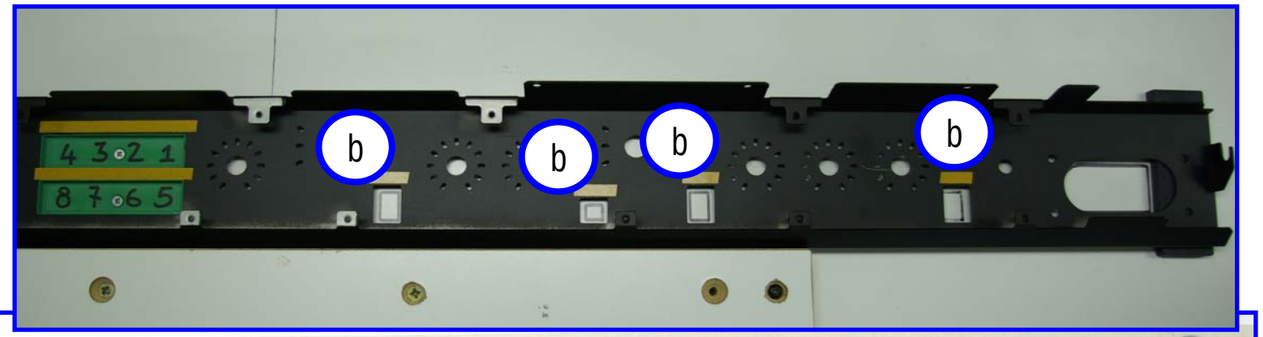

1 = group 1 in "**CONTROL PANEL GROUP 4**"

2 = group 2 in "**CONTROL PANEL GROUP 4**"

3 = group 3 in "**CONTROL PANEL GROUP 4**"

4 = group 4 in "**CONTROL PANEL GROUP 4**"

5 = group 5 in "**CONTROL PANEL GROUP 4**"

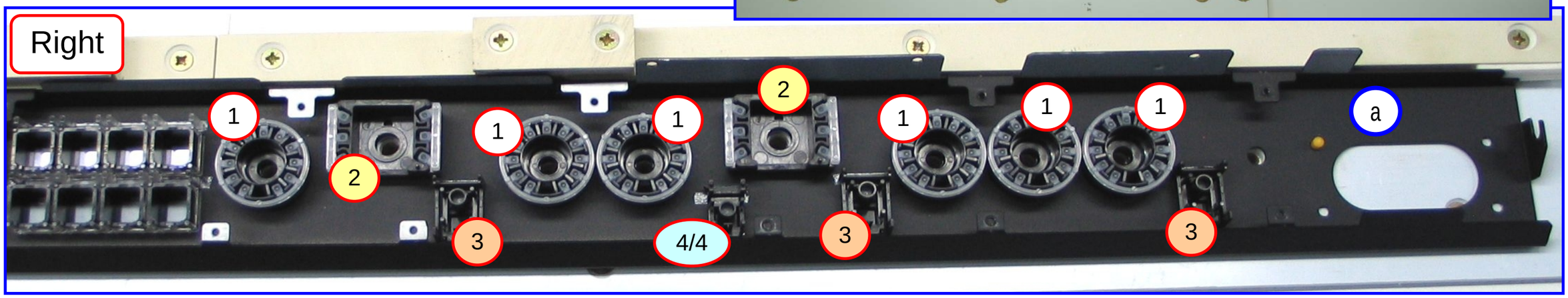

CONTROL PANEL GROUP 4

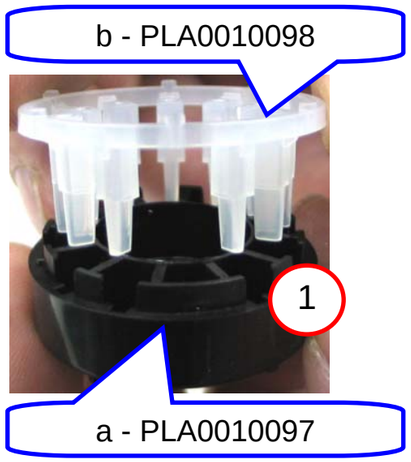

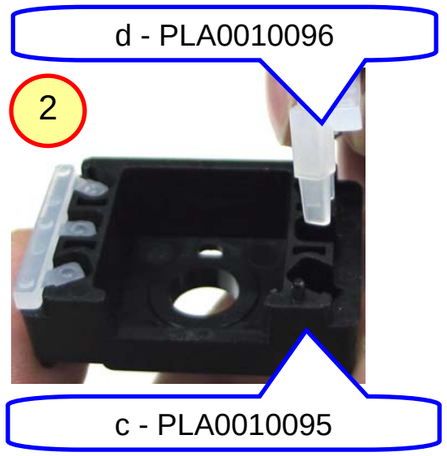

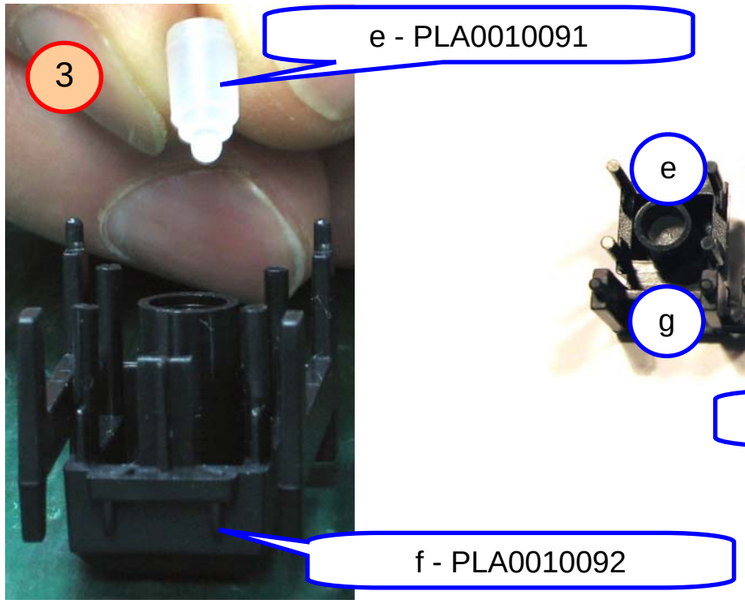

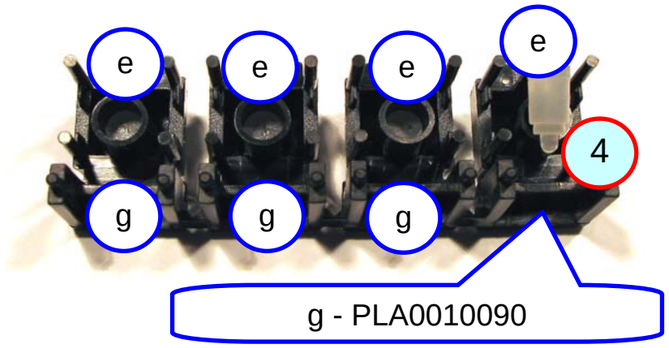

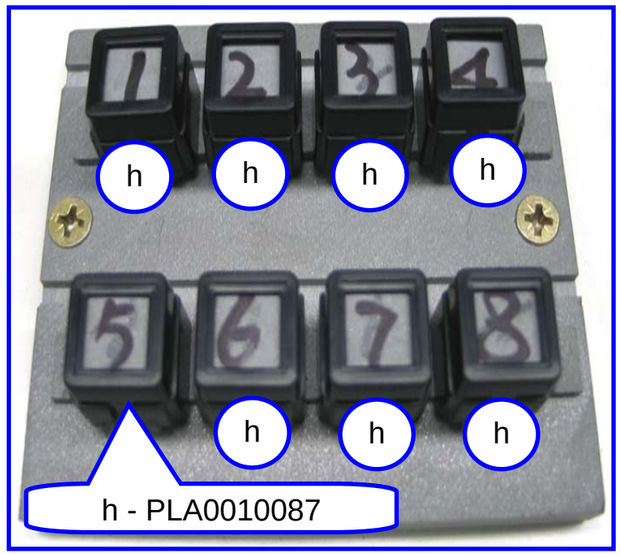

i - PLA0010120

j - PLA0010121

k - PLA0010122

l - PLA0010123

m - PLA0010124

n - PLA0010125

o - PLA0010126

p - PLA0010127

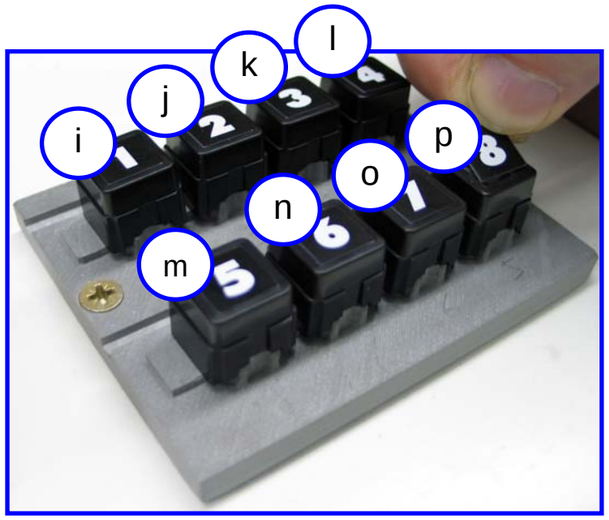

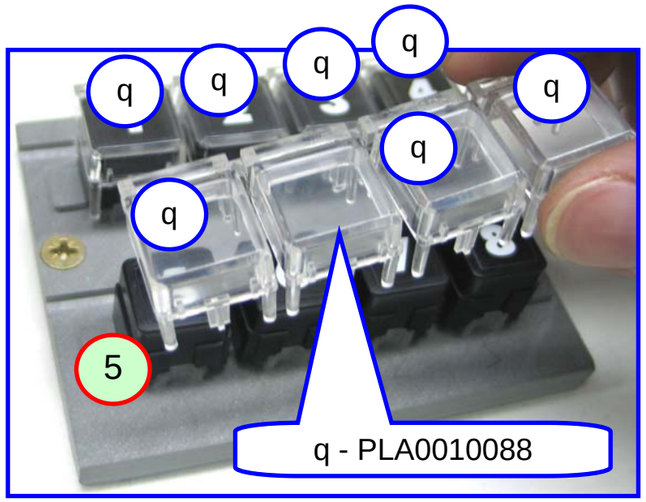

PLASTIC SIDE GROUPS

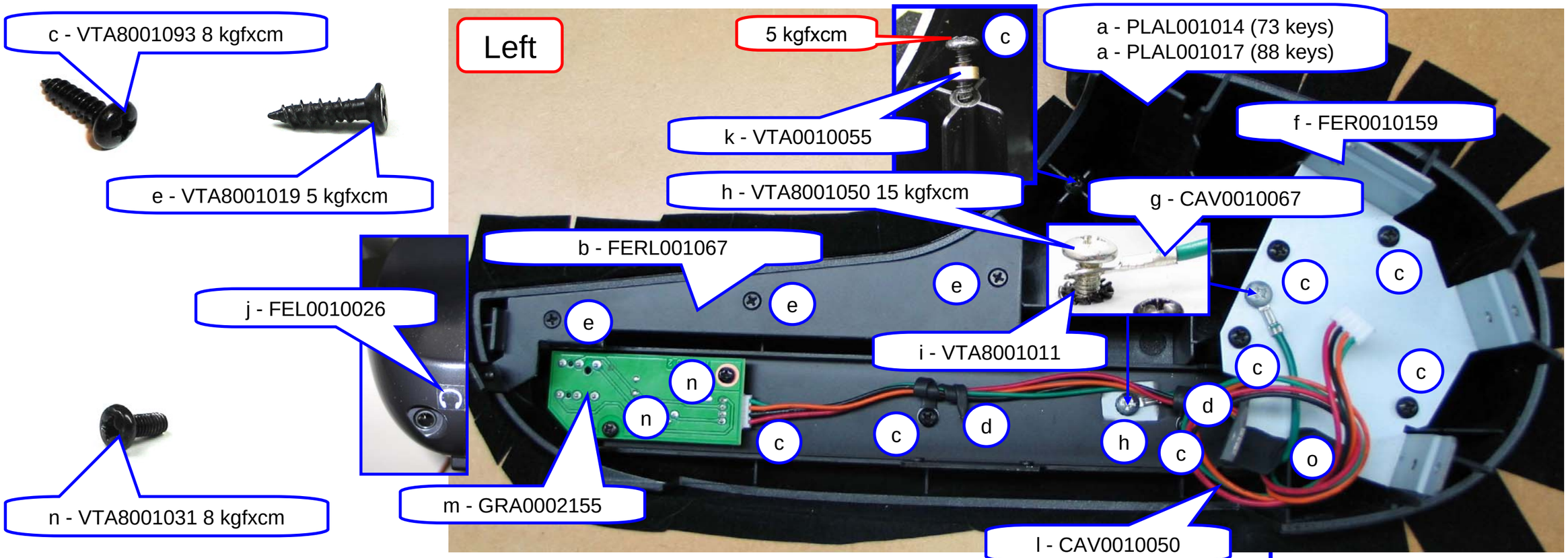

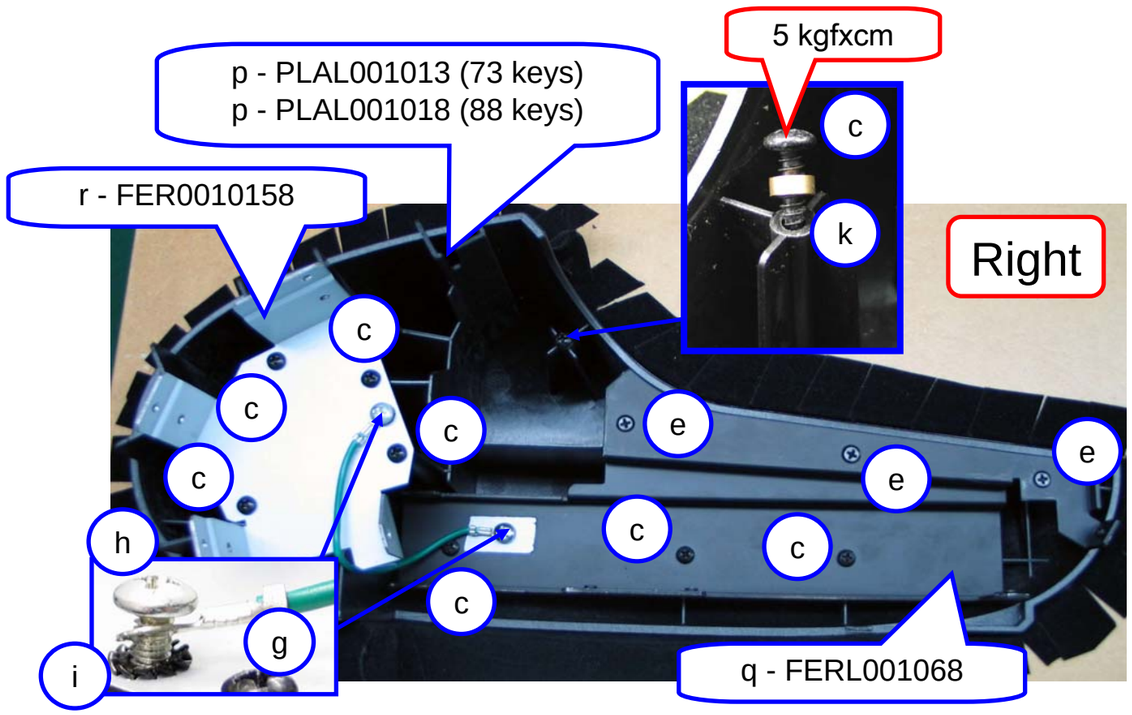

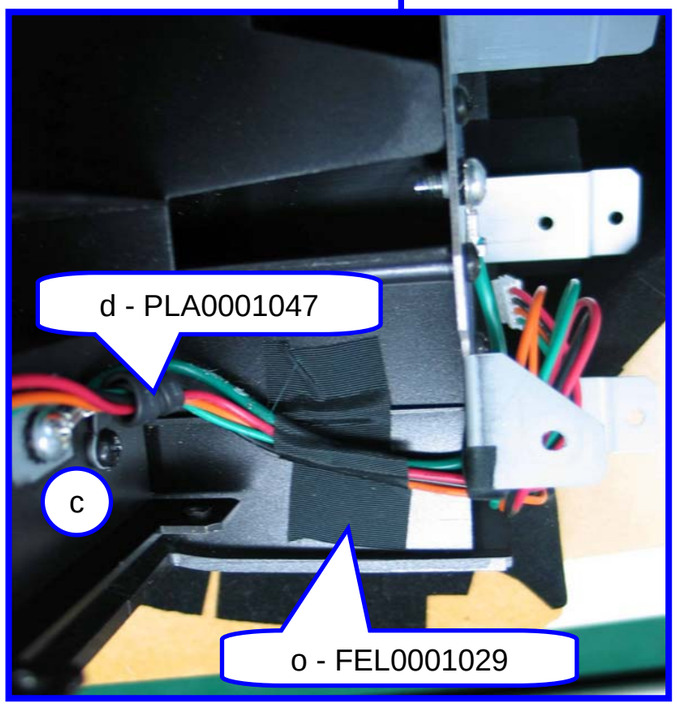

KEYBOARD GROUP

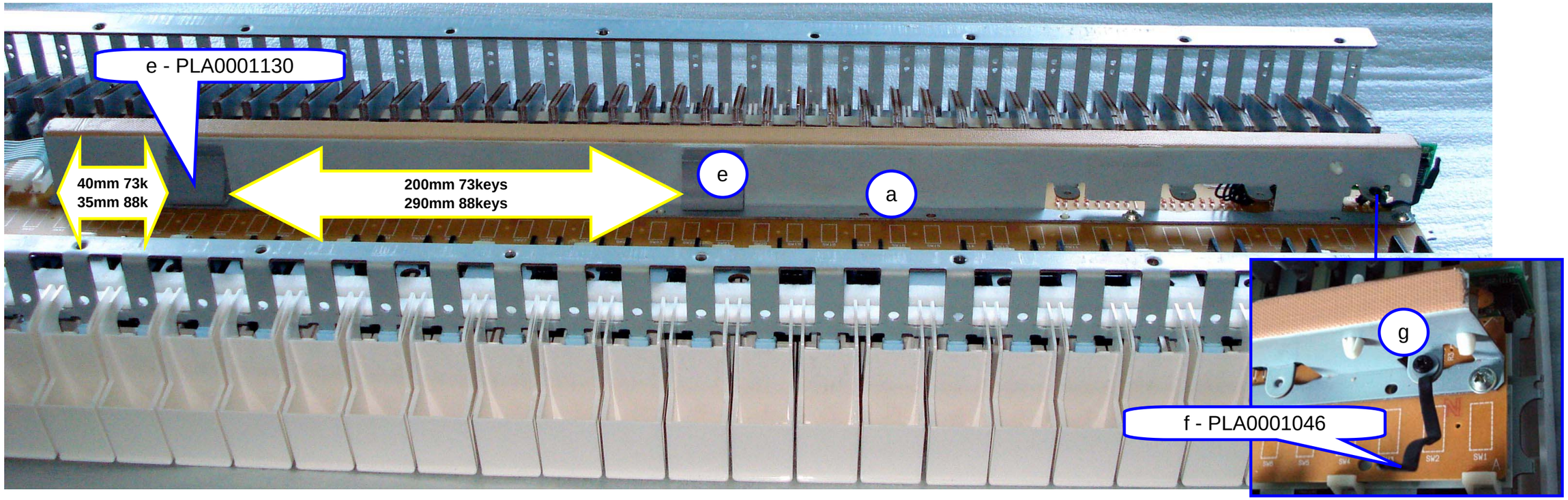

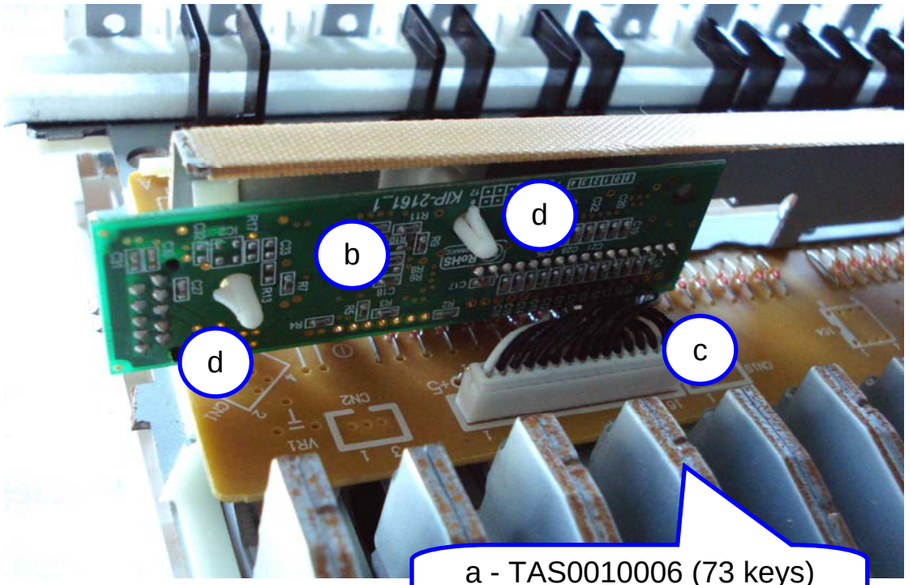

a - TAS0010006 (73 keys)
a - TAS0010008 (88 keys)

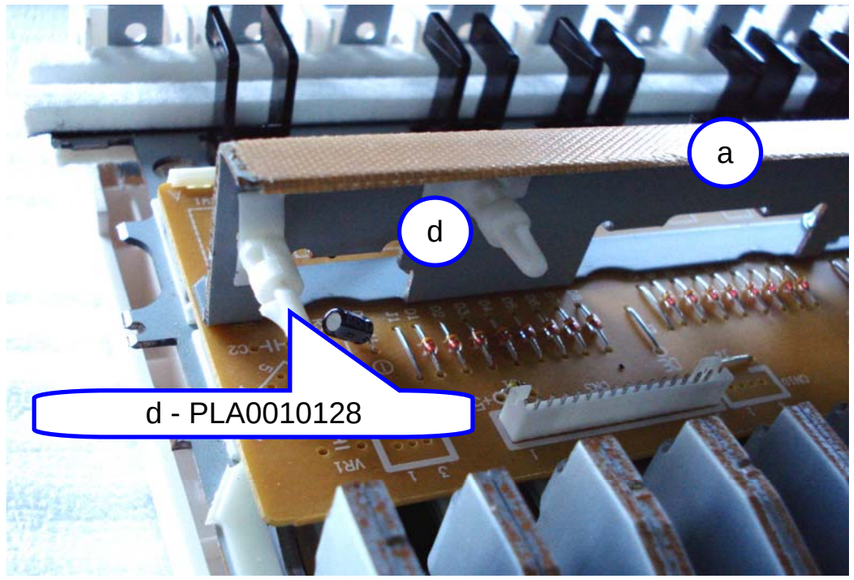

d - PLA0010128

b - GRA0002161

c - CAV0010065 (73 keys)
c - CAV0010023 (88 keys)

g - VTA8001037 8 kgfxcm

OUTPUT BOARD GROUP

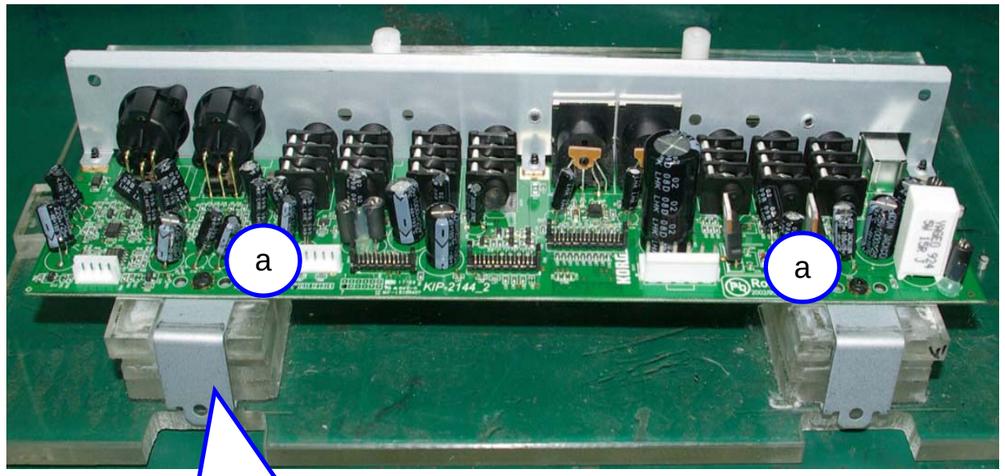

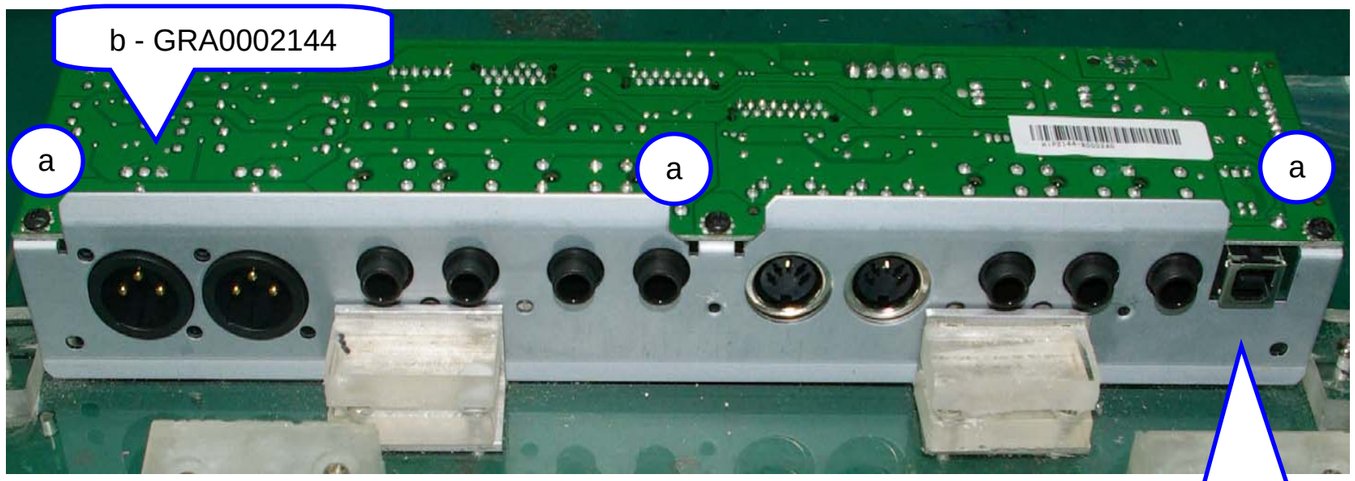

c - FER0010125

d - FER0010124

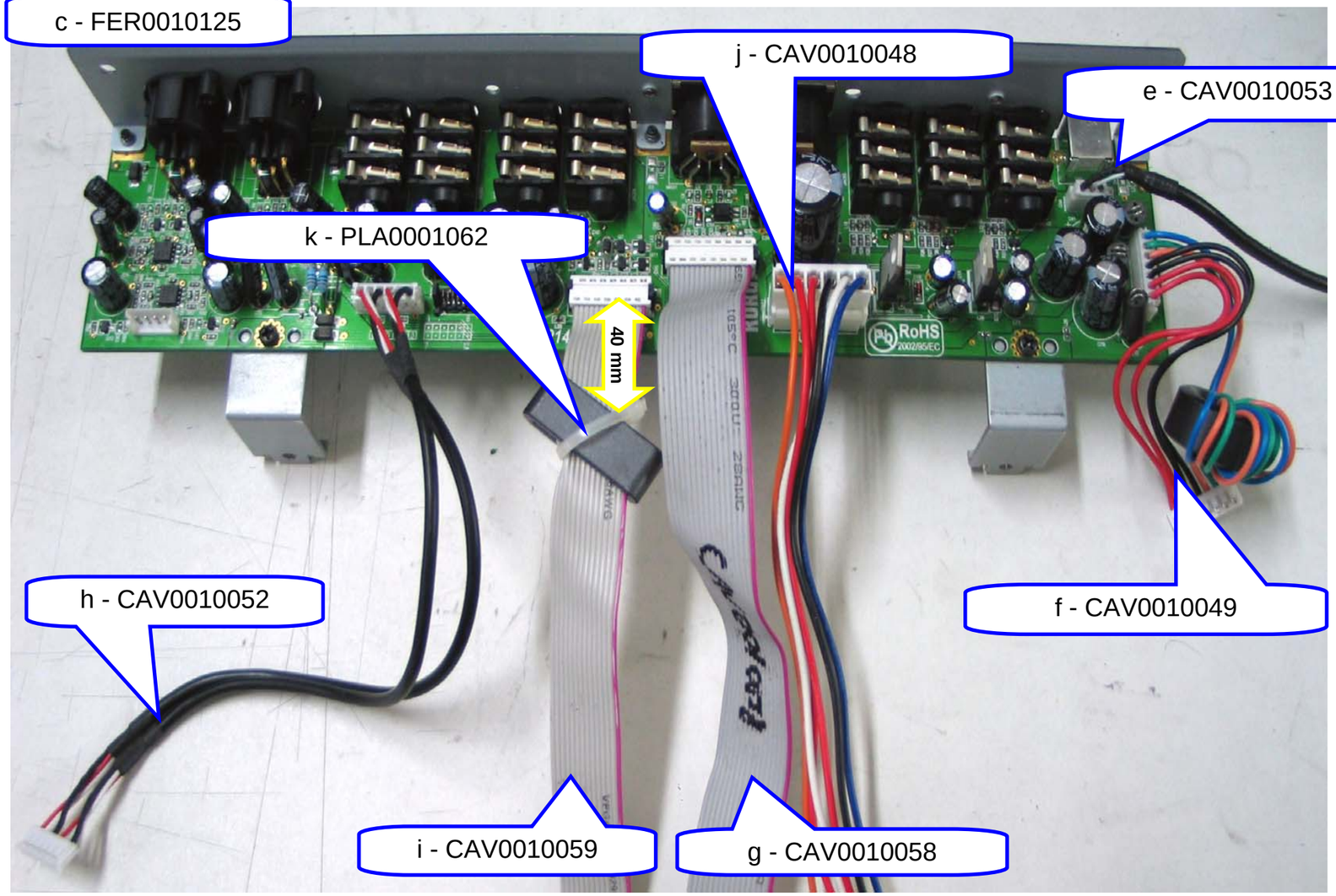

a - VTA8001037 10 kgfxcm

POWER SUPPLY GROUP

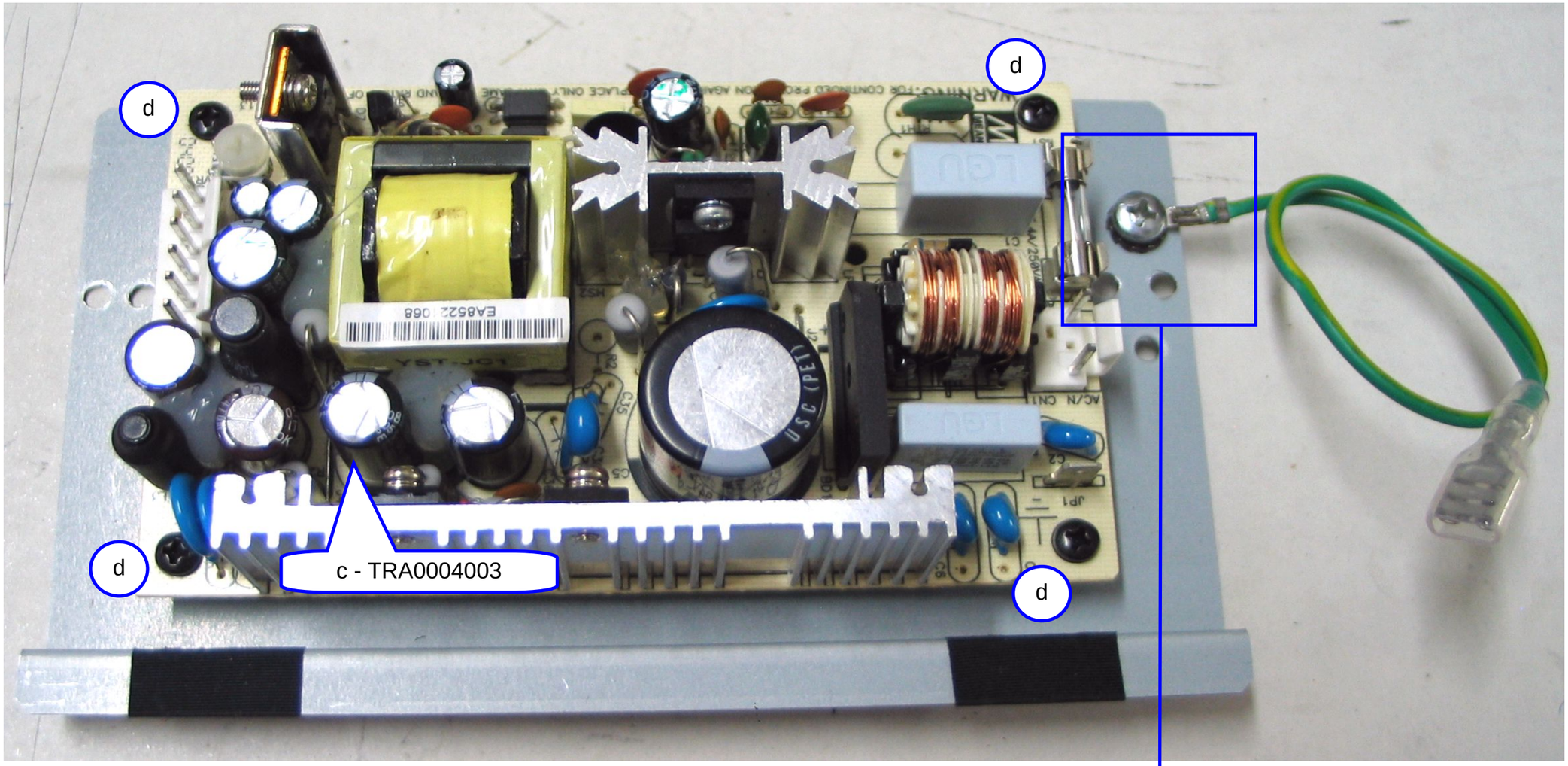

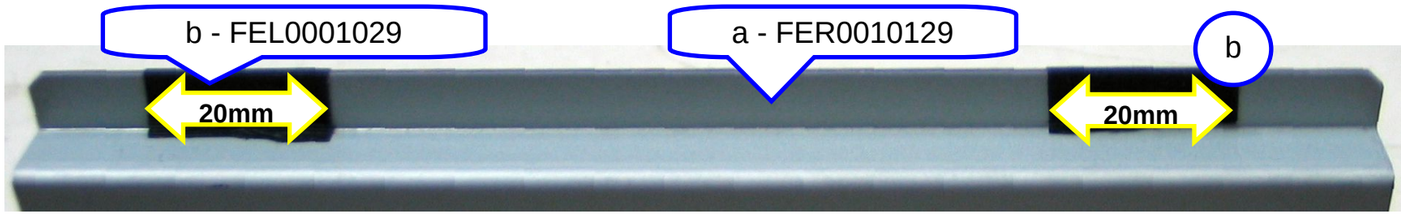

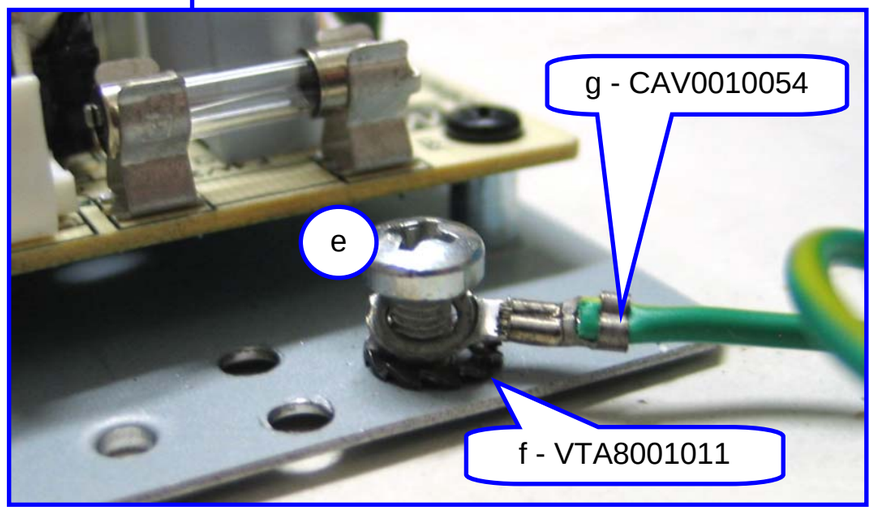

d - VTA8001032 10kgfxcm

e - VTA8001050 14kgfxcm

TUBE GROUP

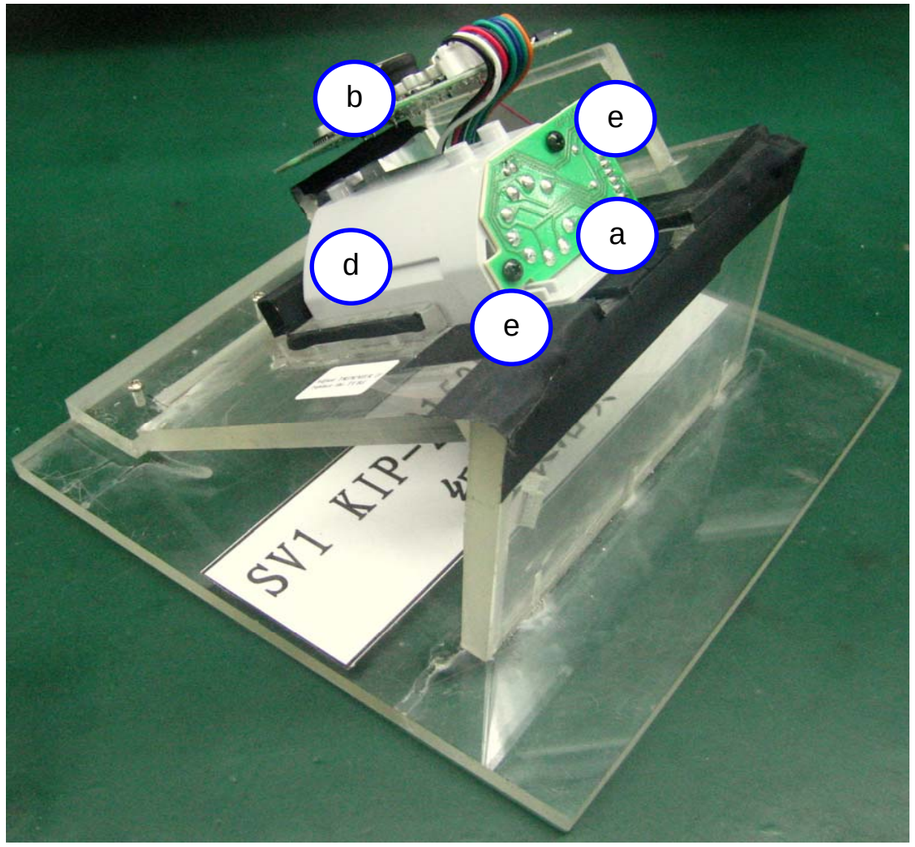

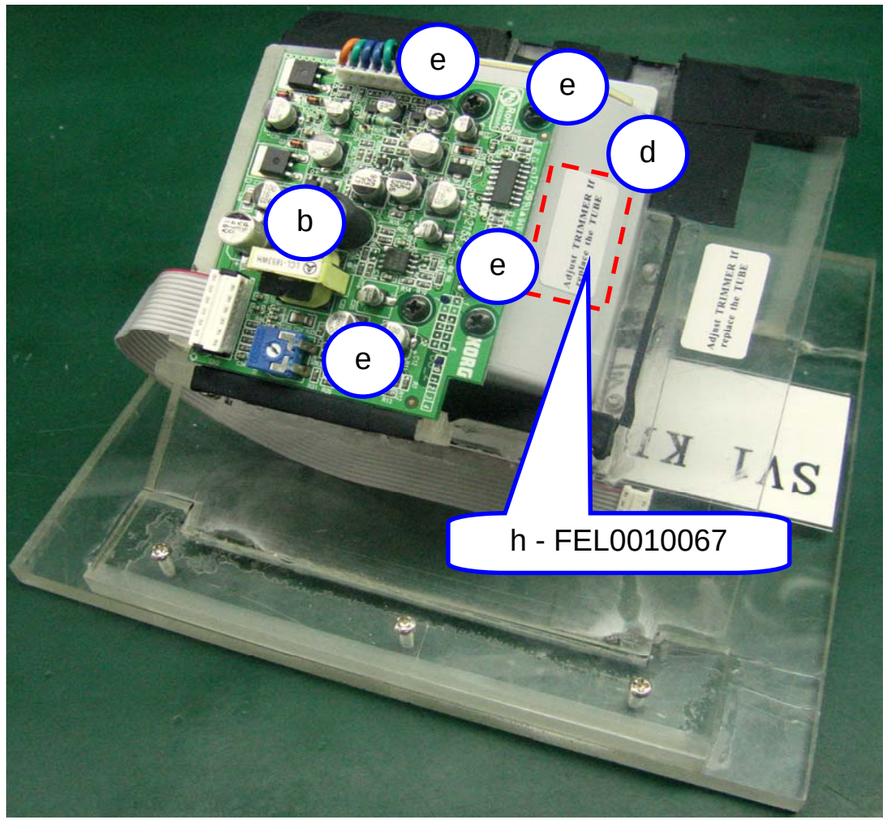

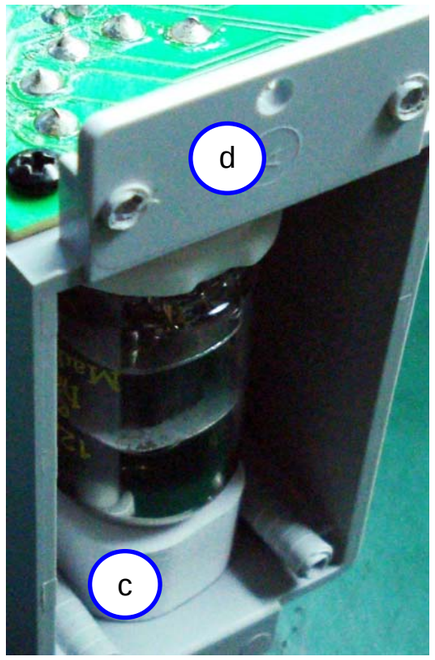

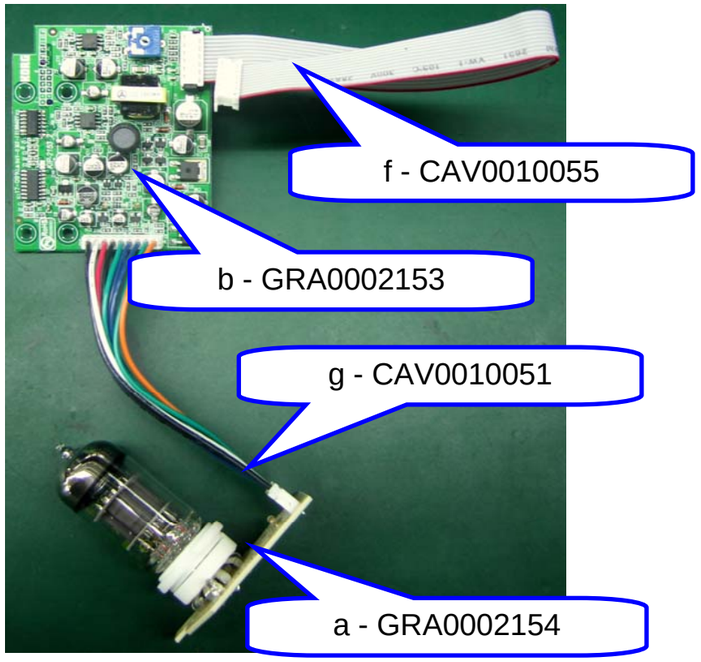

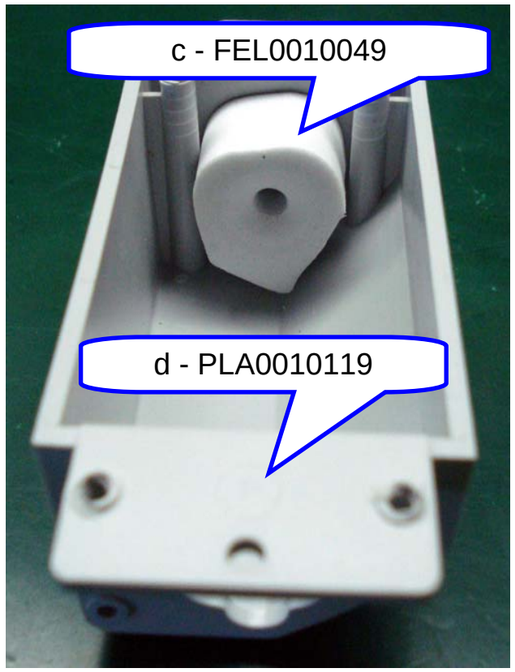

e - VTA8001037 5kgfxcm

KEYBOARD BASE GROUP

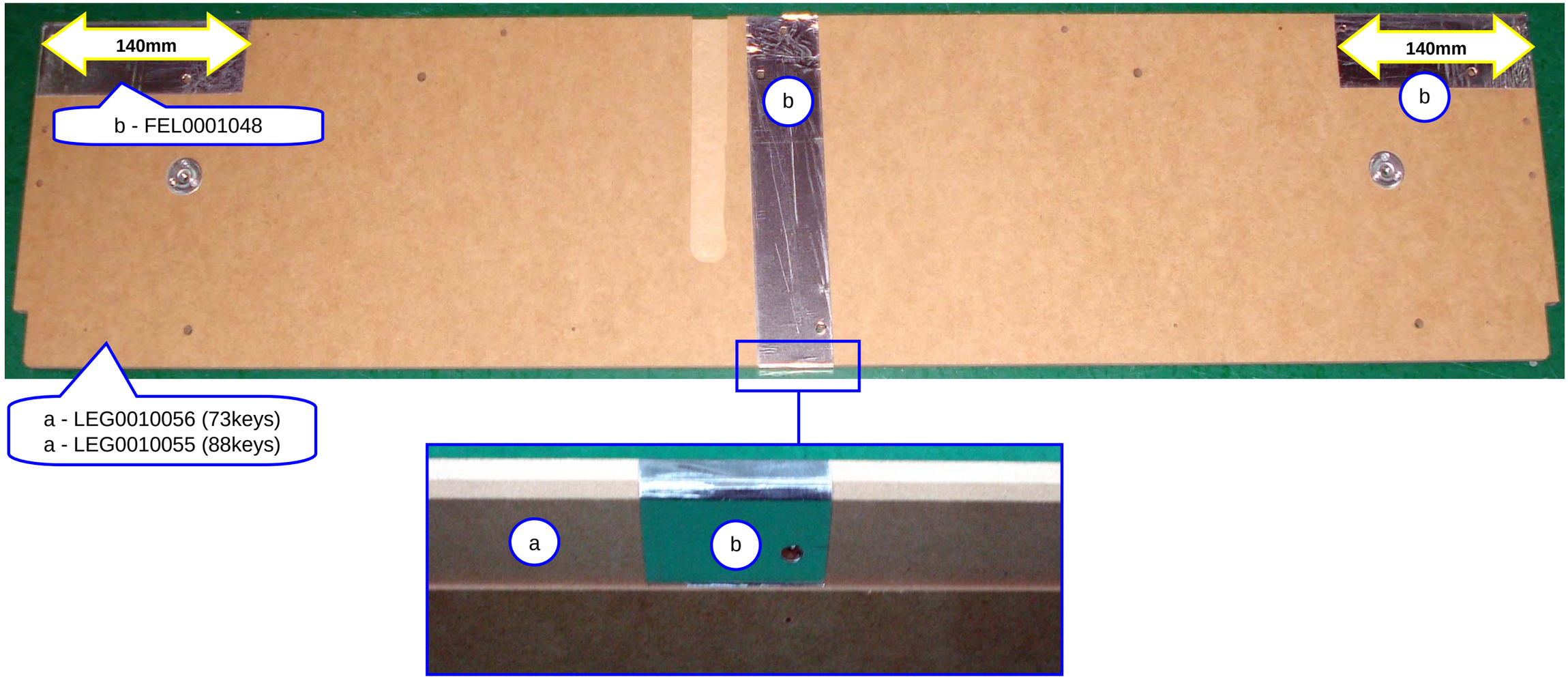

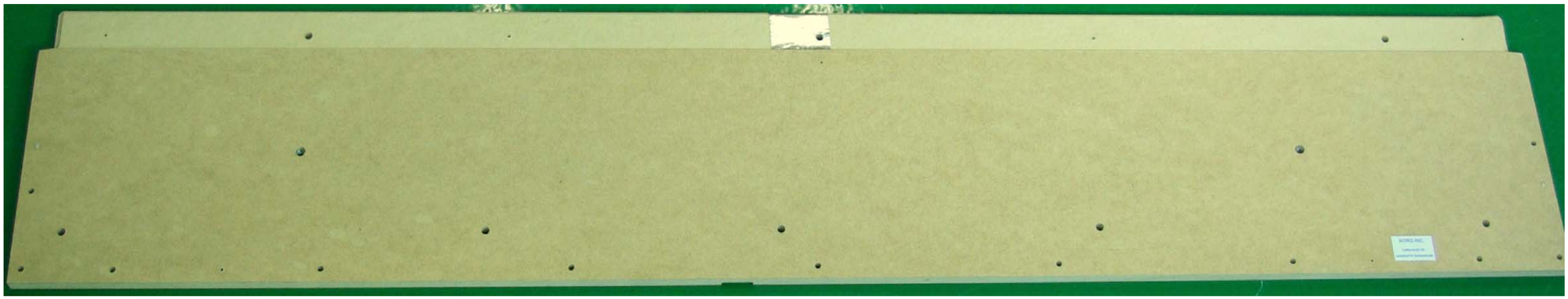

SV1 BLOCK DIAGRAM

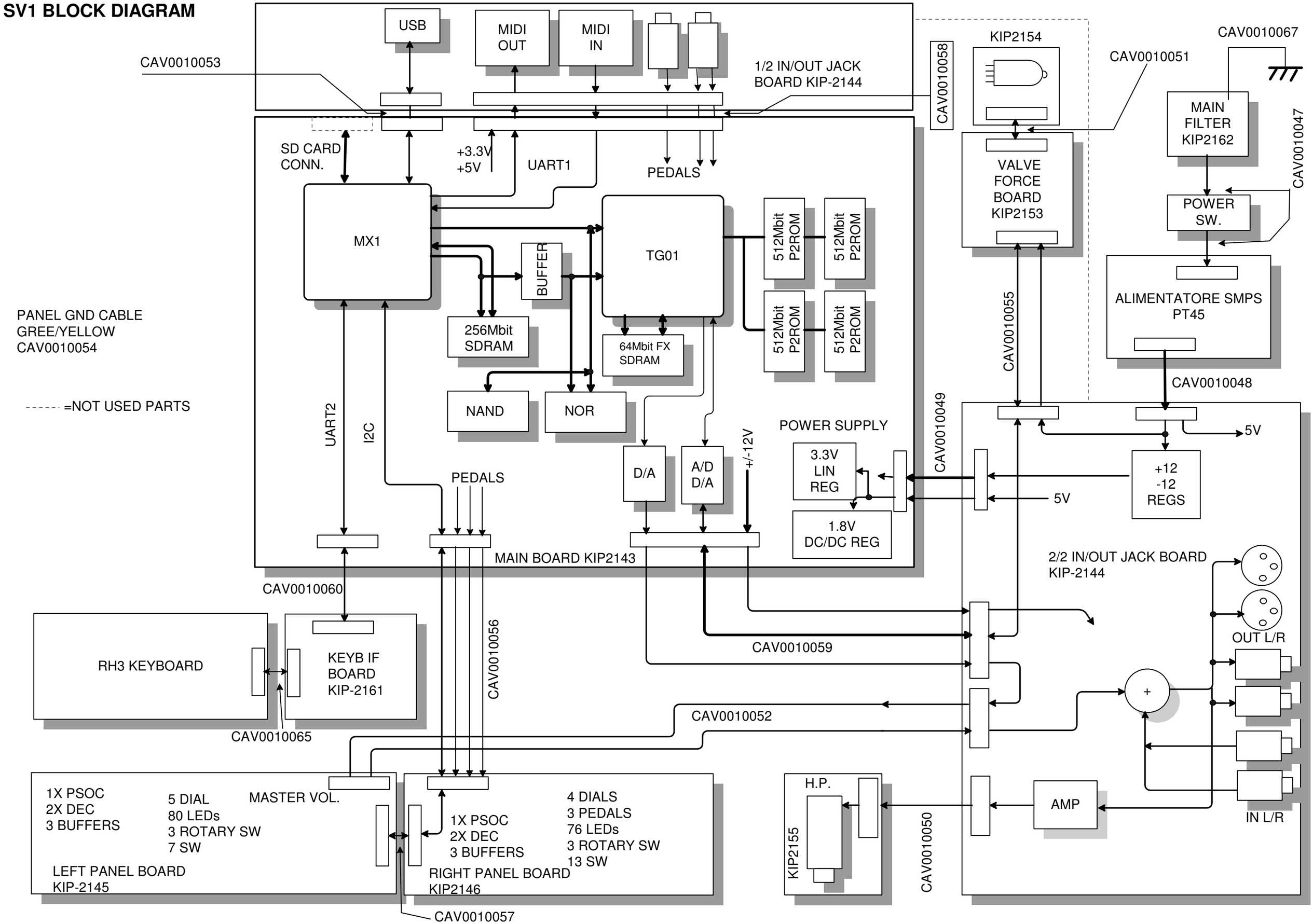

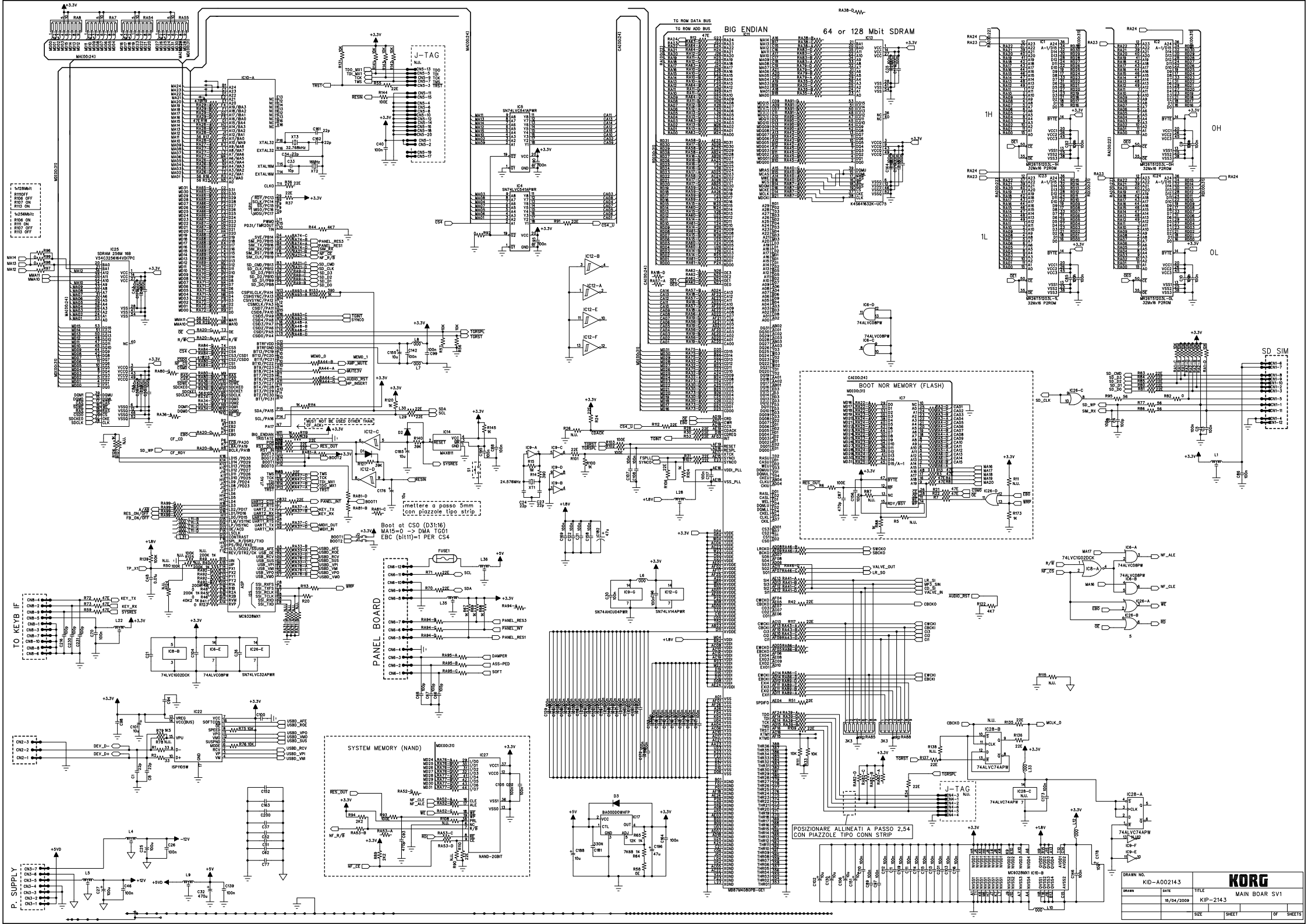
BIG ENDIAN
64 or 128 Mbit SDRAM
J-TAG
BOOT NOR MEMORY (FLASH)
SD_SIM
TO KEYB IF
PANEL BOARD
SYSTEM MEMORY (NAND)
P. SUPPLY
mettere a passo 5mm con piazzole tipo strip
Boot at CS0 (D31:16)
MA15=0 -> DMA TG01
EBC (bit11)=1 PER CS4
POSIZIONARE ALLINEATI A PASSO 2,54 CON PIAZZOLE TIPO CONN STRIP
DRAWN NO.
KID-A002143
KORG
MAIN BOAR SV1
DRAWN
DATE
15/04/2009
TITLE
KIP-214.3
SIZE
SHEET
OF
SHEETS

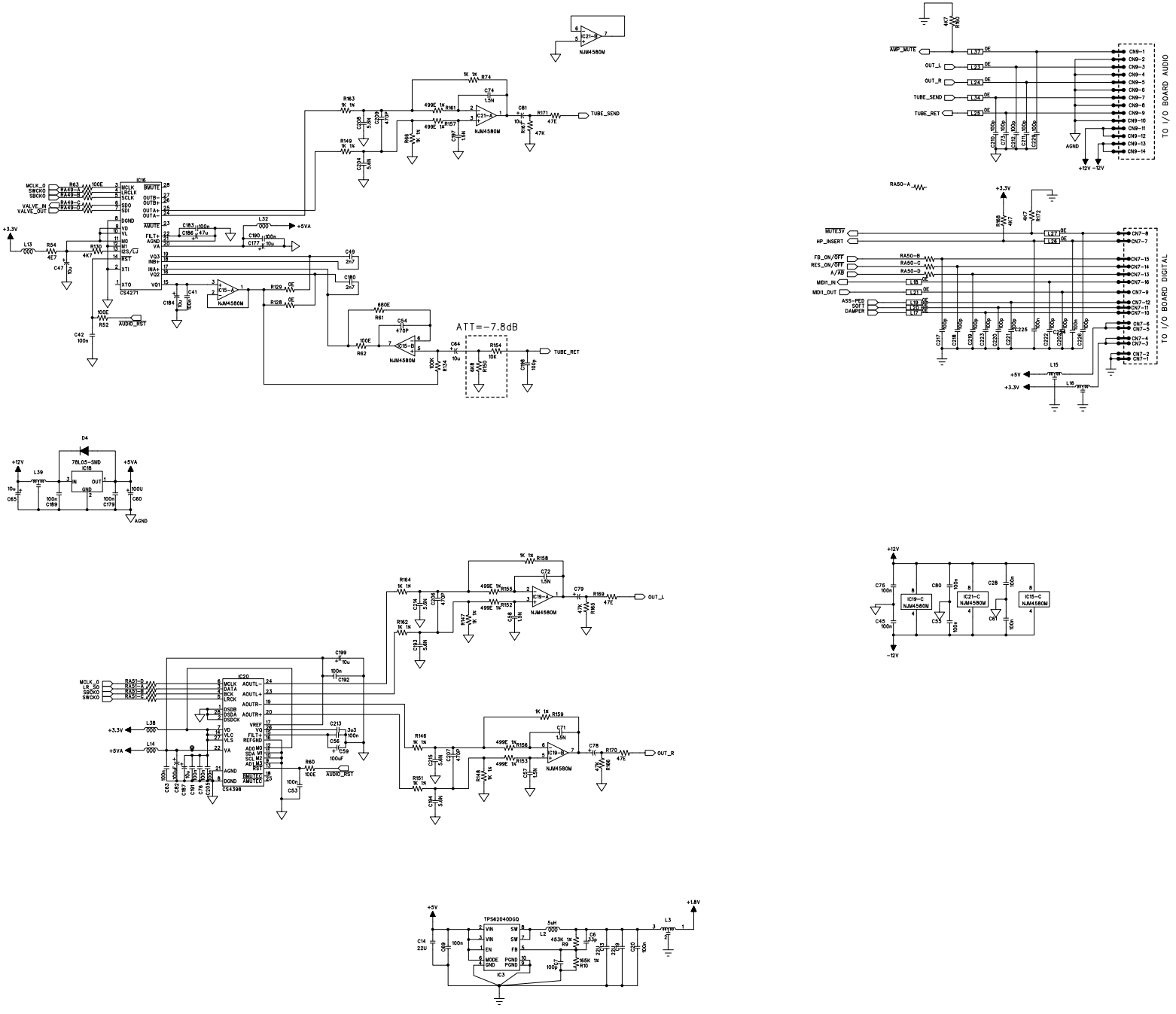

DRAWN NO.		KORG
KID-A002143		
DRAWN	DATE	TITLE
	15/04/2009	MAIN BOAR SV1
		KIP-2143
	SIZE	SHEET OF SHEETS

REVISION RECORD			
LTR	ECO NO:	APPROVED:	DATE:

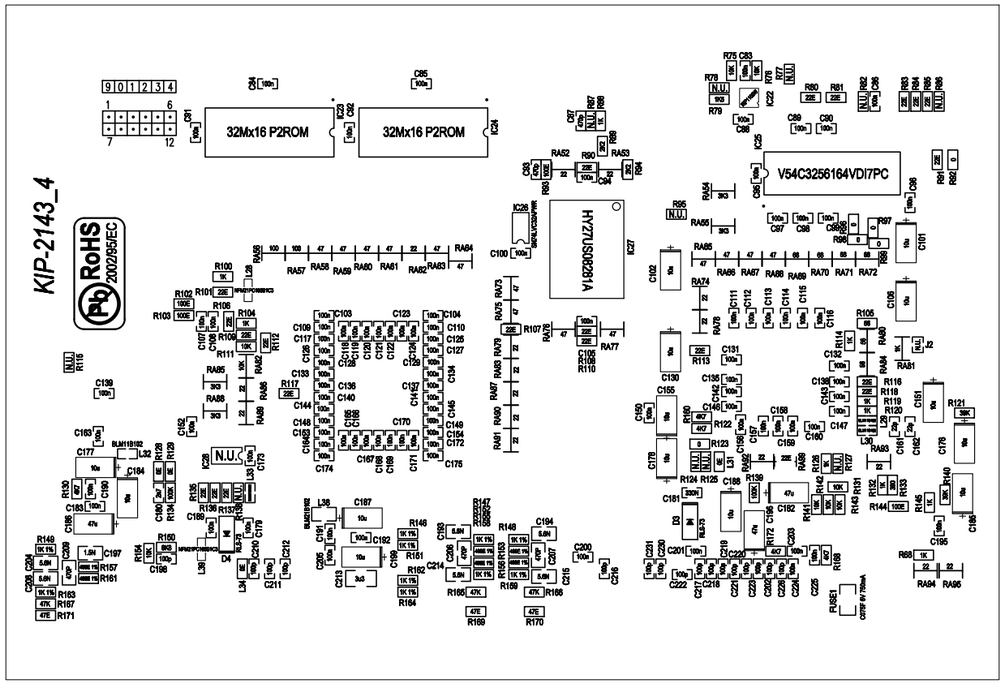

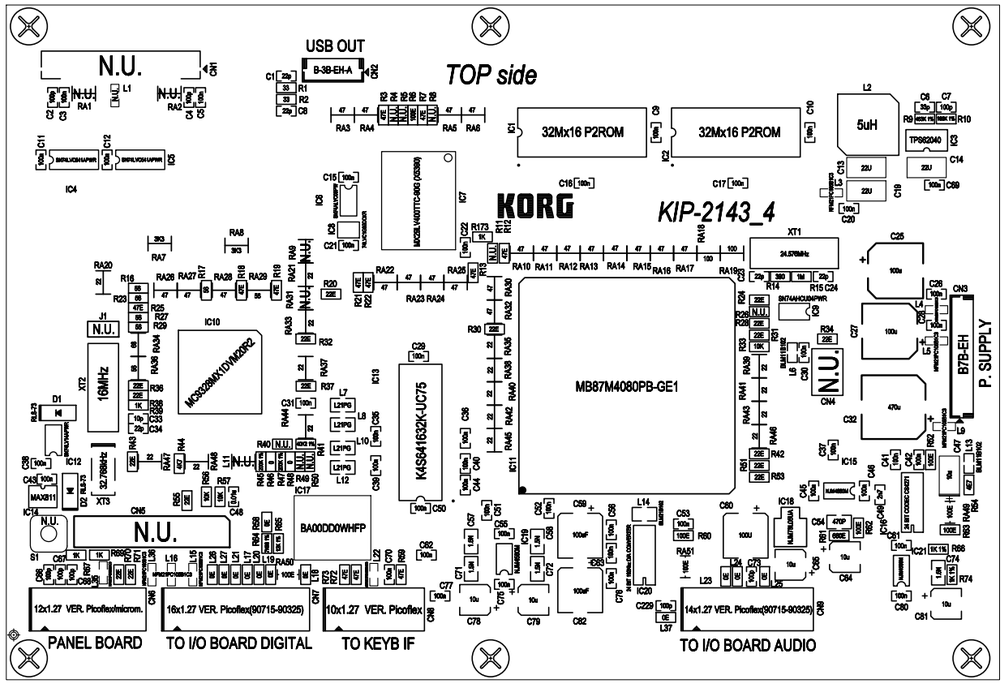

FASE	DESCRIZIONE
1	
2	
3	
4	

DRAWN:	DATED:	
CHECKED:	DATED:	
QUALITY CONTROL:	DATED:	
RELEASED:	DATED:	

COMPANY: KORG

TITLE: MAIN BOARD SV1

CODE:	SIZE:	DRAWING NO:	REV:
		KID-F002143_3	

SCALE: SHEET: OF

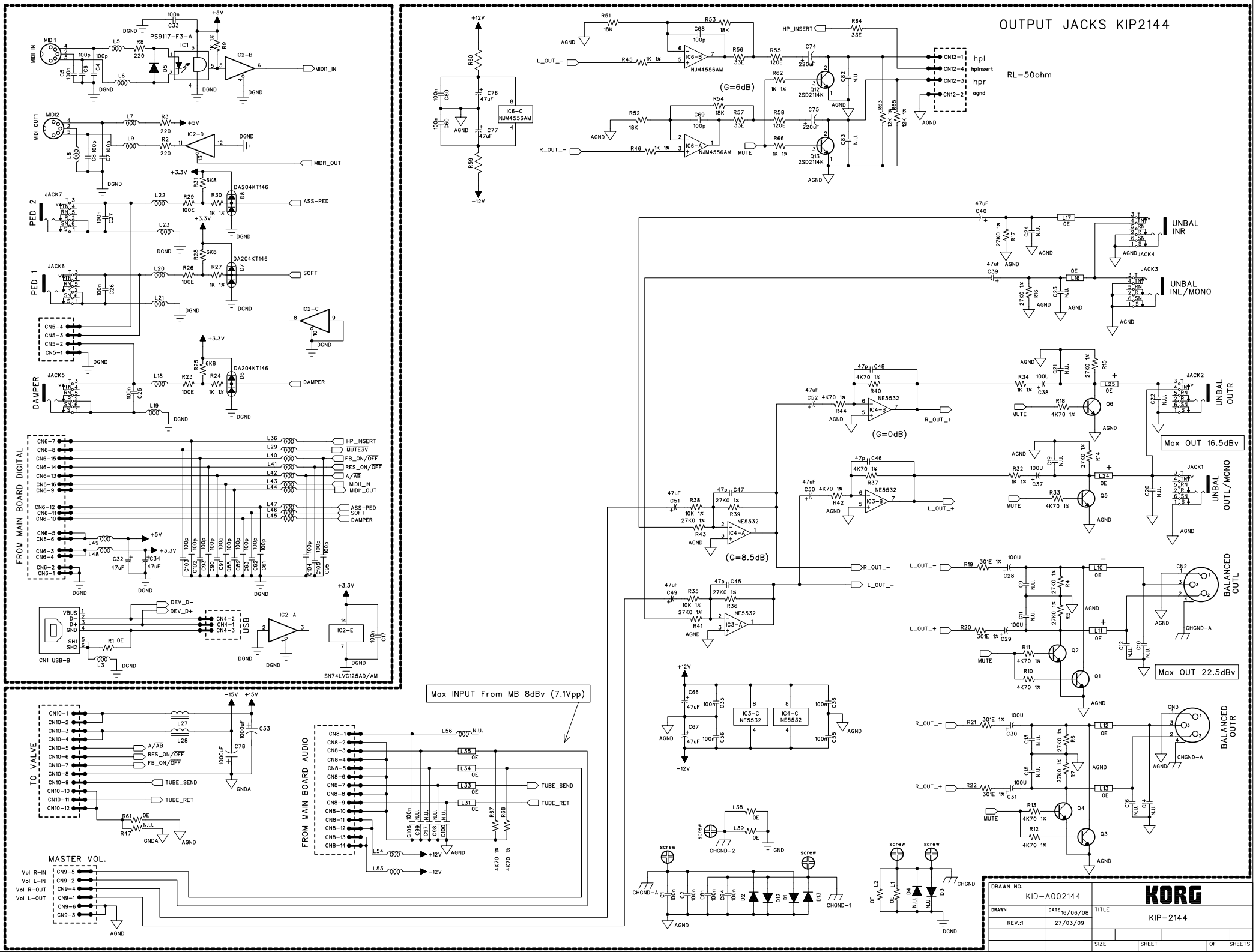
OUTPUT JACKS KIP2144
RL=50ohm
(G=6dB)
(G=0dB)
(G=8.5dB)
Max OUT 16.5dBv
Max OUT 22.5dBv
Max INPUT From MB 8dBv (7.1Vpp)
MIDI IN
MIDI OUT
PED 2
PED 1
DAMPER
FROM MAIN BOARD DIGITAL
USB
TO VALVE
FROM MAIN BOARD AUDIO
MASTER VOL.
UNBAL INR
UNBAL INL/MONO
UNBAL OUTR
UNBAL OUTL/MONO
BALANCED OUTL
BALANCED OUTR
KORG
KID-A002144
KIP-2144
DRAWN
DATE 16/06/08
REV.:1
27/03/09
SIZE
SHEET
OF
SHEETS

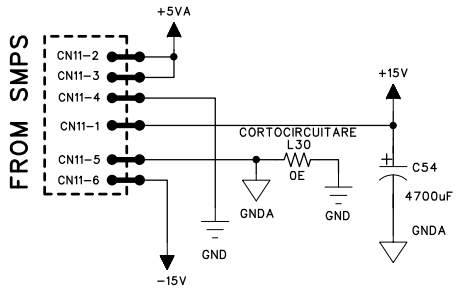

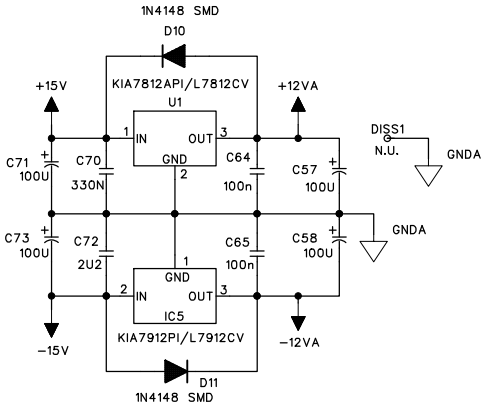

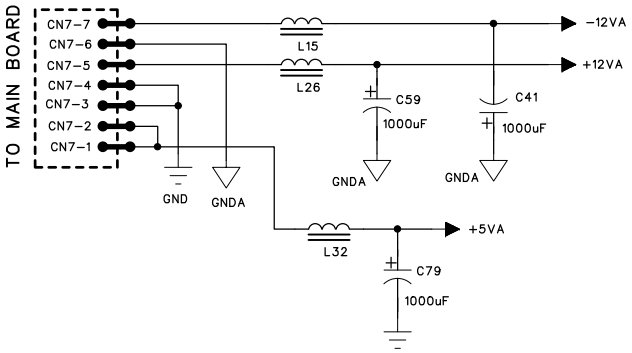

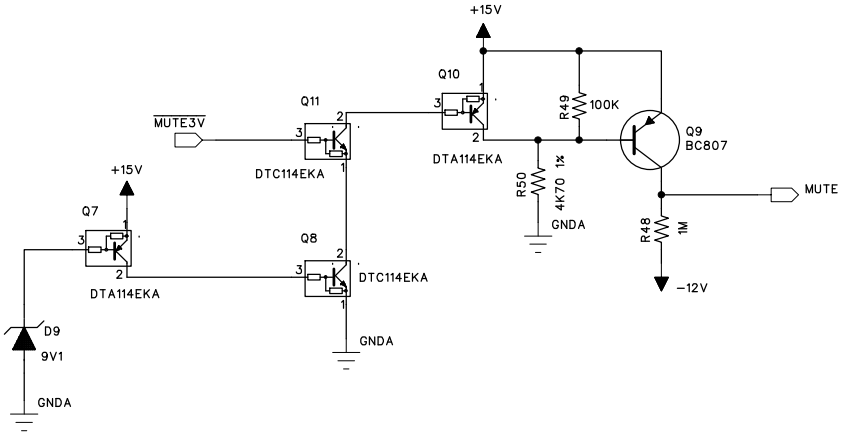

DRAWN NO.		KORG
DRAWN	DATE	TITLE
		SIZE / SHEET / OF SHEETS

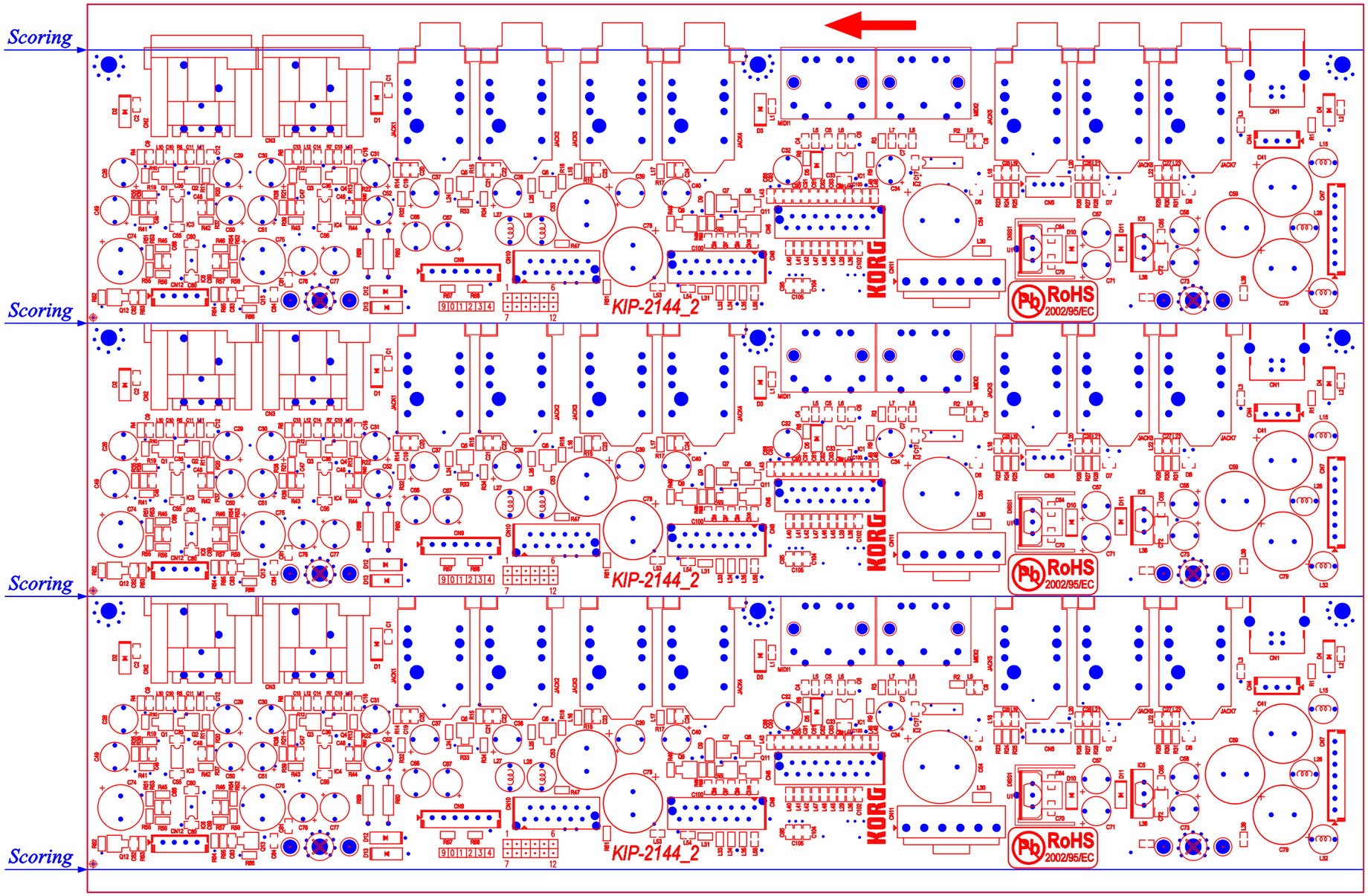

Material: FR4
Laminate Thickness: 1,6mm
Copper Base+Finishing Thickness: min 35u
Hole Wall Thickness: min 20u
Surface Finishing: Chemical Gold
N° Layer: 2

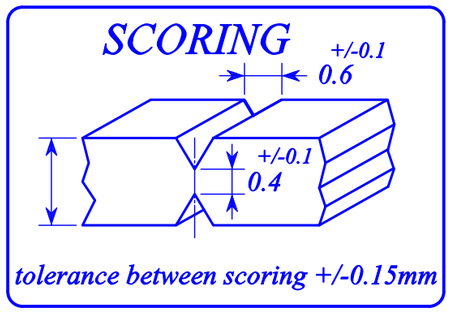

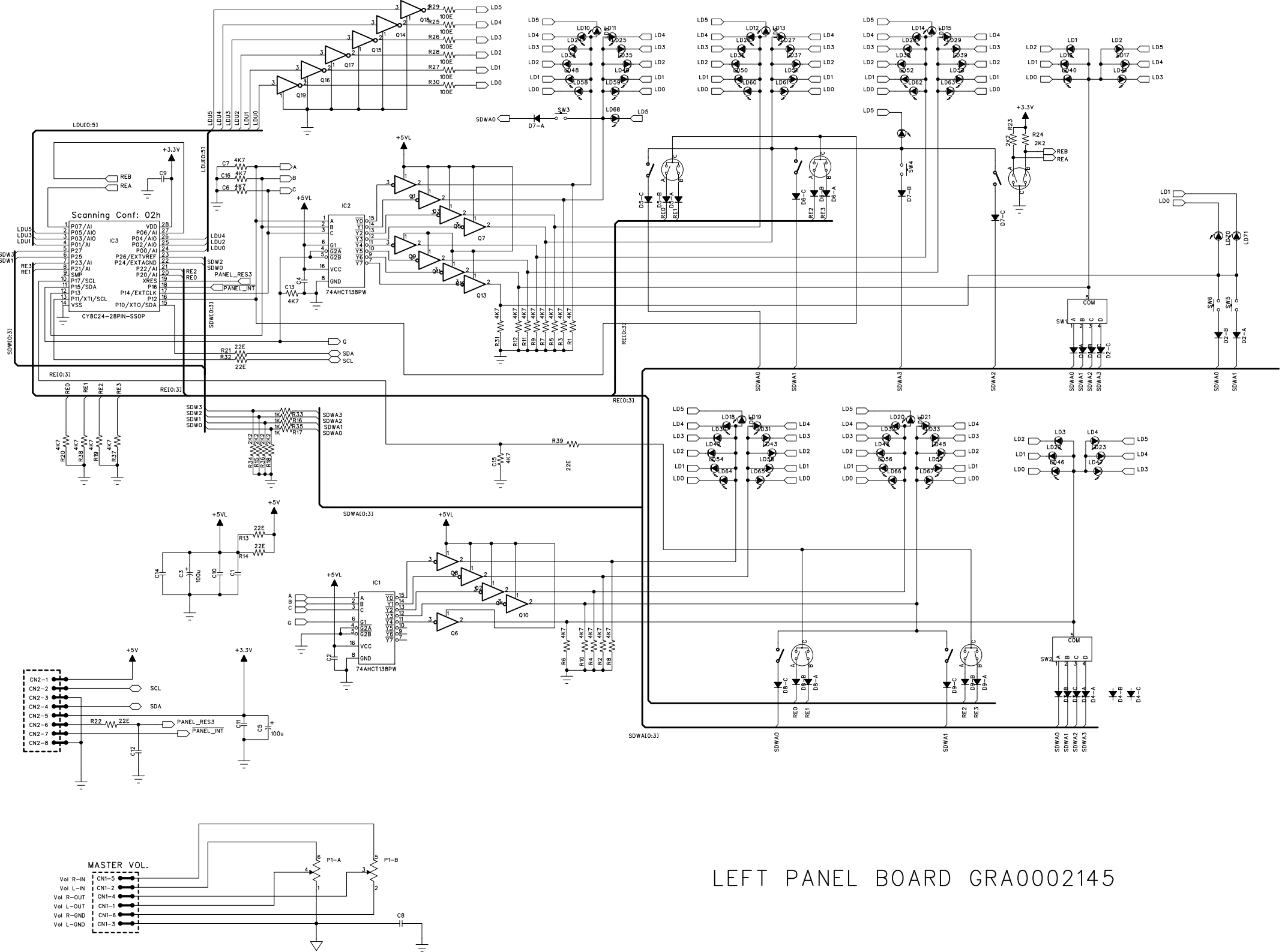
Scanning Conf: 02h
CY8C24-28PIN-SSOP
74AHCT138PW
MASTER VOL.
LEFT PANEL BOARD GRA0002145

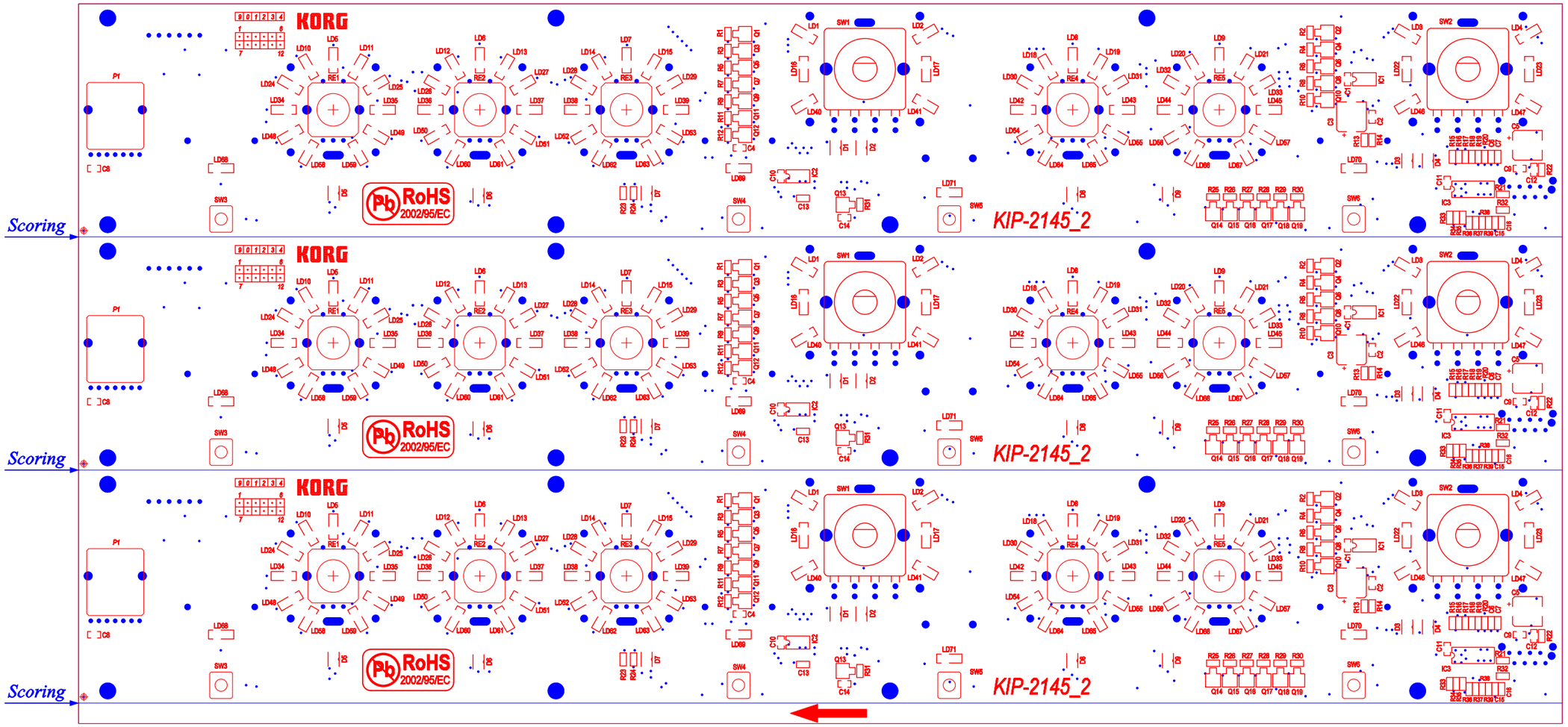

Material: FR4
Laminate Thickness: 1,6mm
Copper Base+Finishing Thickness: min 35u
Hole Wall Thickness: min 20u
Surface Finishing: Chemical Gold
N° Layer: 2

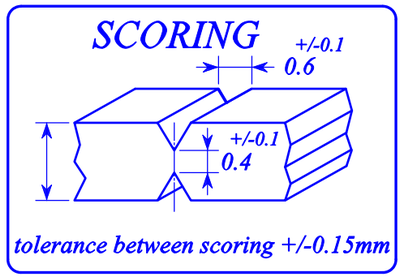

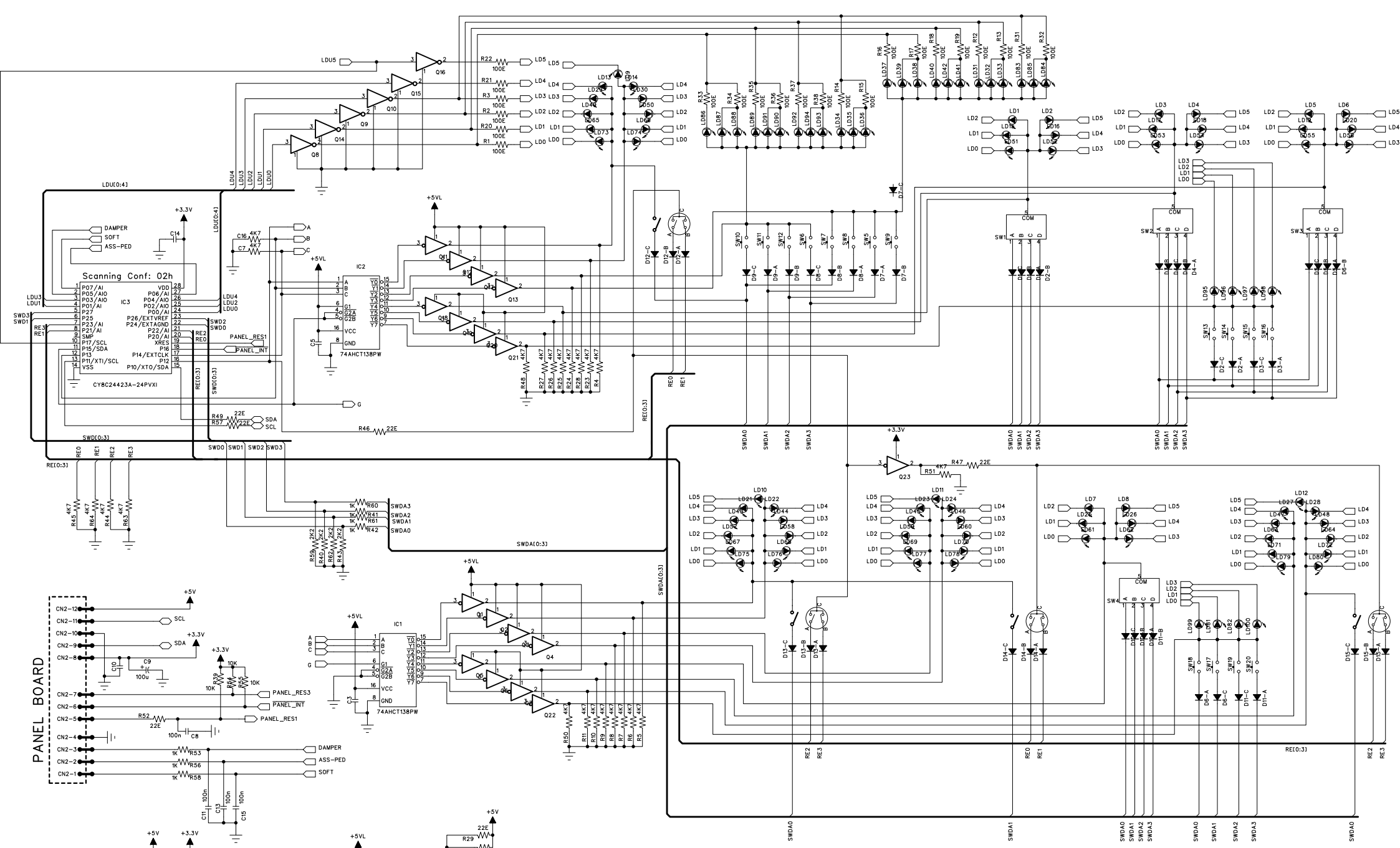

RIGHT PANEL BOARD GRA0002146

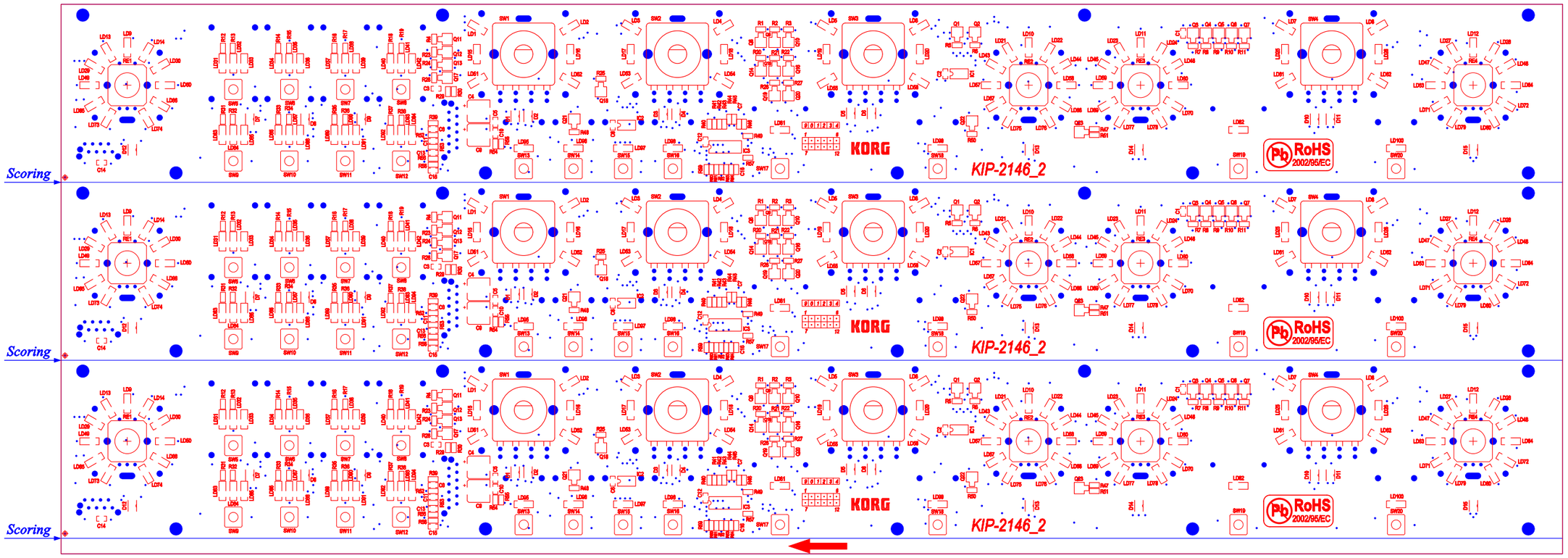

Material: FR4
Laminate Thickness: 1,6mm
Copper Base+Finishing Thickness: min 35u
Hole Wall Thickness: min 20u
Surface Finishing: Chemical Gold
N° Layer: 2

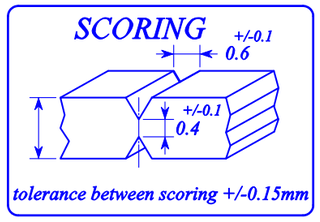

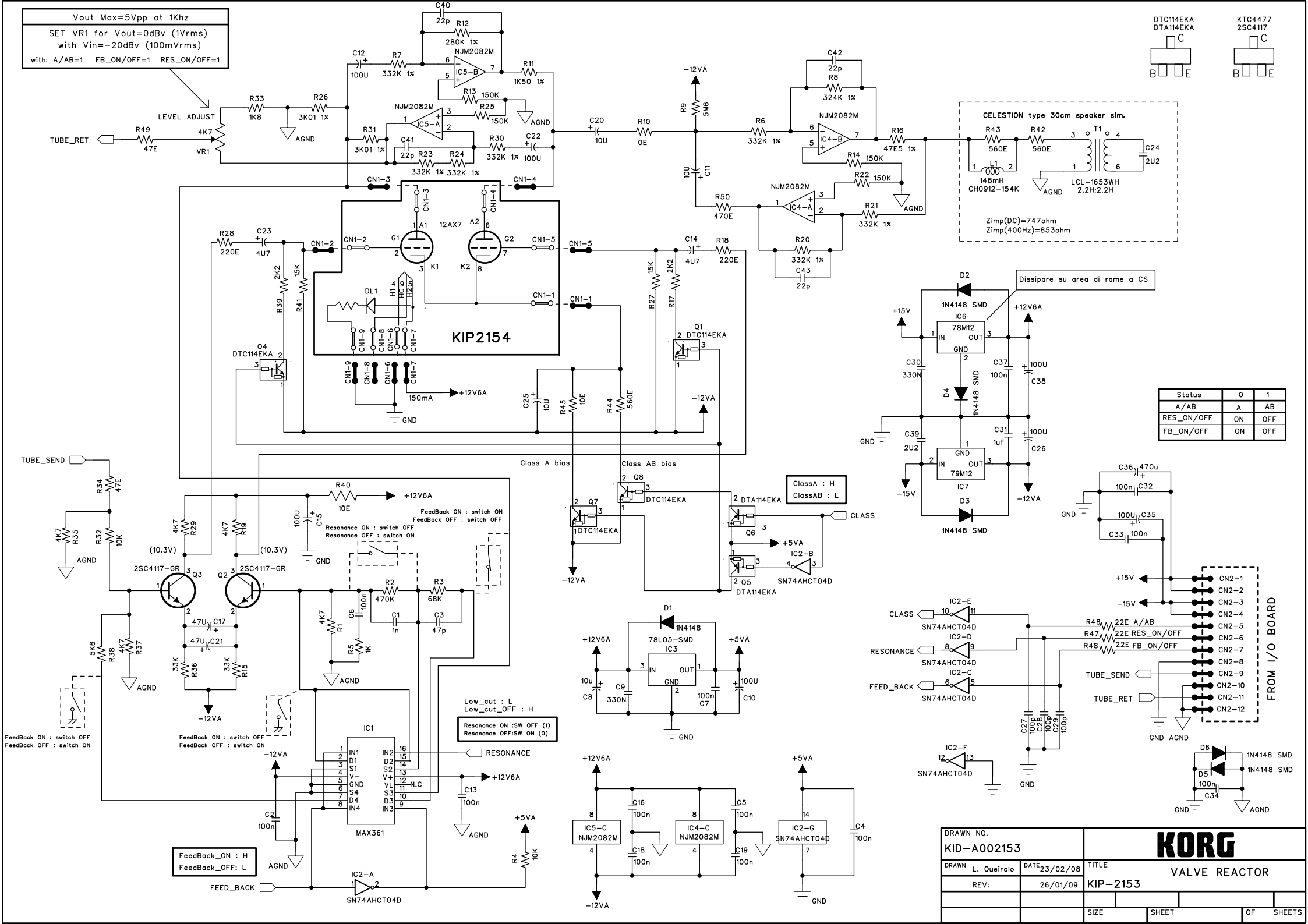

Status	0	1
A/AB	A	AB
RES_ON/OFF	ON	OFF
FB_ON/OFF	ON	OFF

DRAWN NO. KID-A002153		KORG
DRAWN L. Queirolo	DATE 23/02/08	TITLE VALVE REACTOR
REV:	26/01/09	KIP-2153
		SIZE / SHEET / OF SHEETS

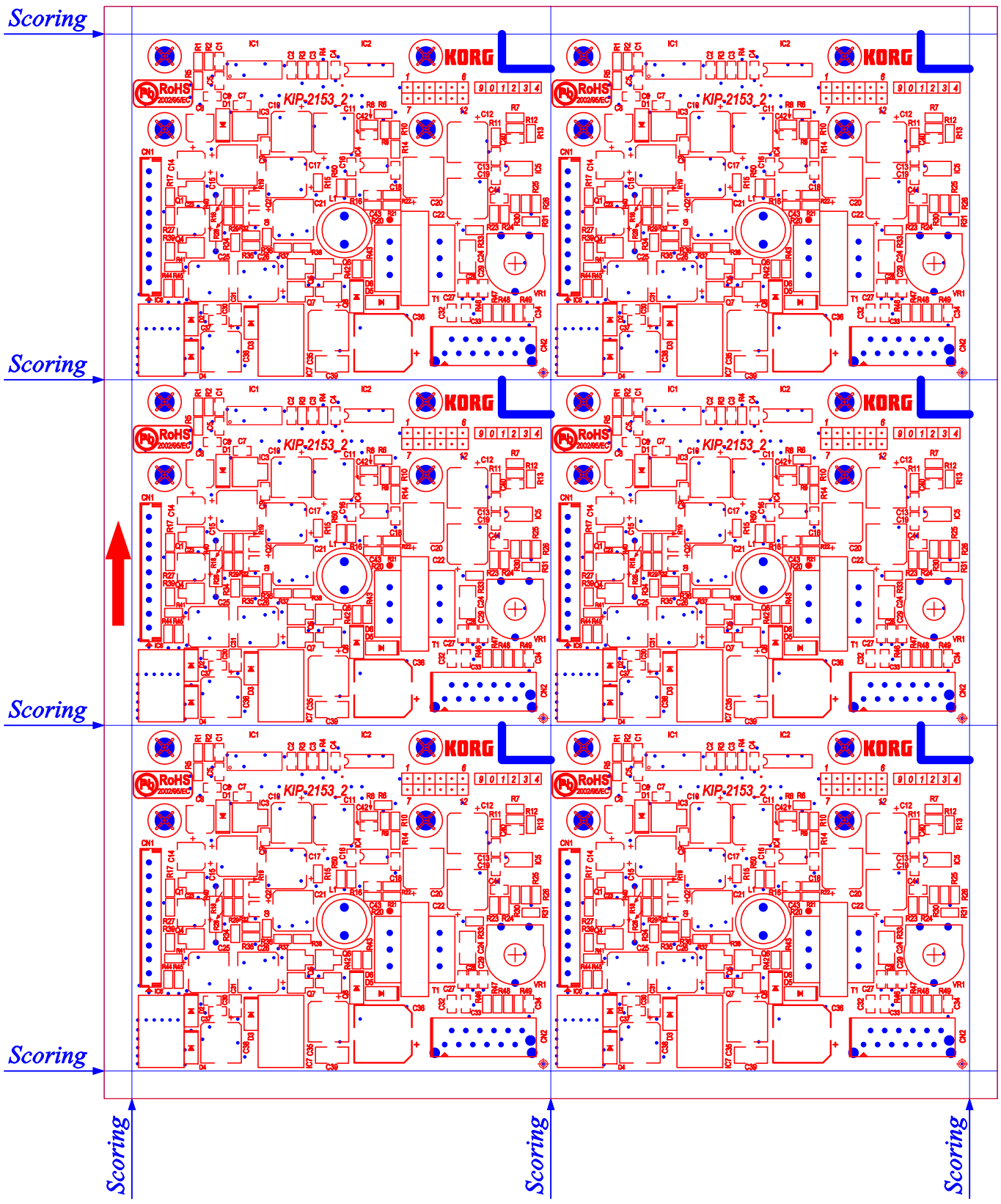

Material: FR4
Laminate Thickness: 1,6mm
Copper Base+Finishing Thickness: min 35u
Hole Wall Thickness: min 20u
Surface Finishing: Chemical Gold
N° Layer: 2

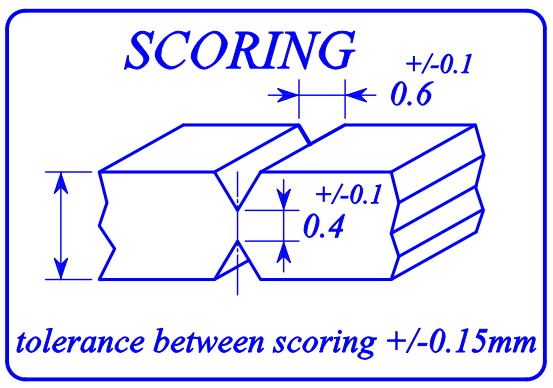

TUBE SOCKET PCB

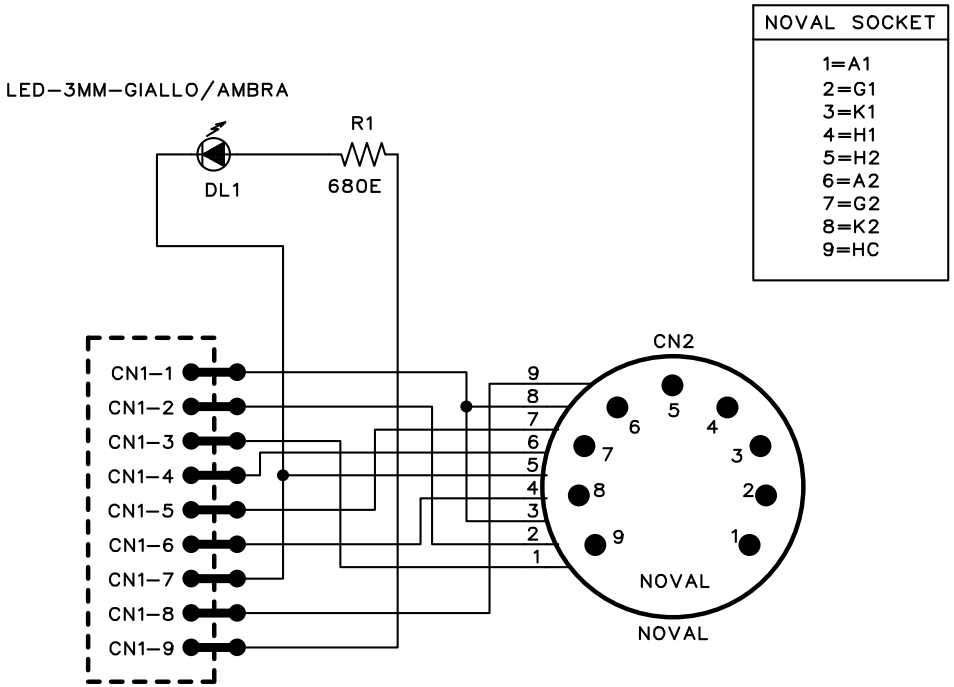

DRAWN NO. KID-A002154		KORG
DRAWN L. Queirolo	DATE 05/02/09	TITLE VALVE SOCKET KIP-2154
		SIZE / SHEET / OF SHEETS

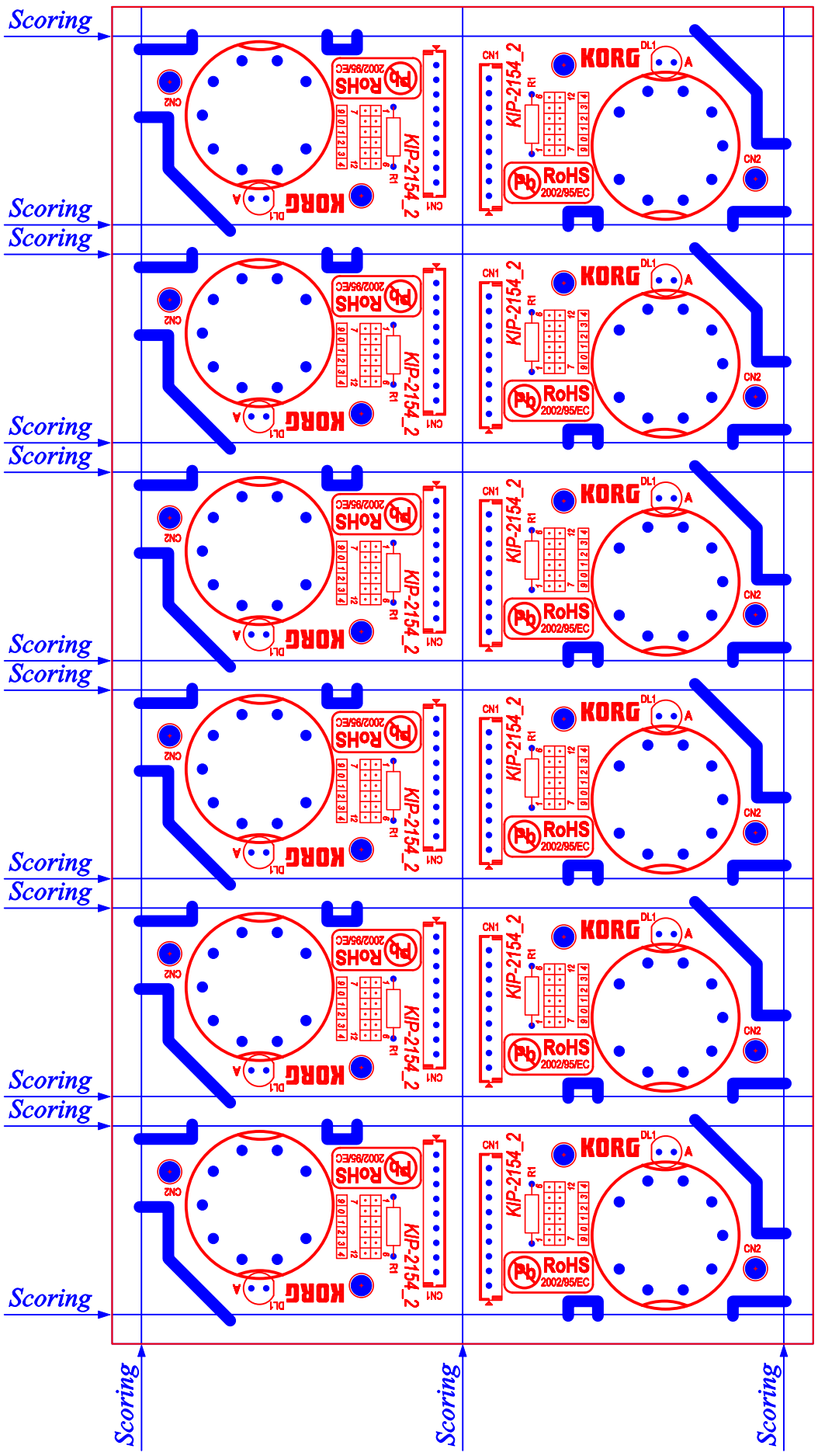

Material: CEM-1
Laminate Thickness: 1,6mm
Copper Base Thickness: min 35u
Surface Finishing: OSP (Rame Passivato)
N° Layer: 1

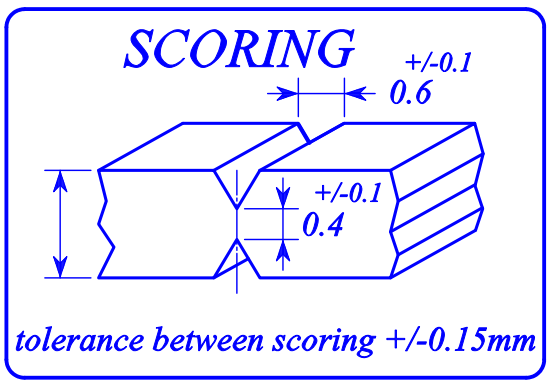

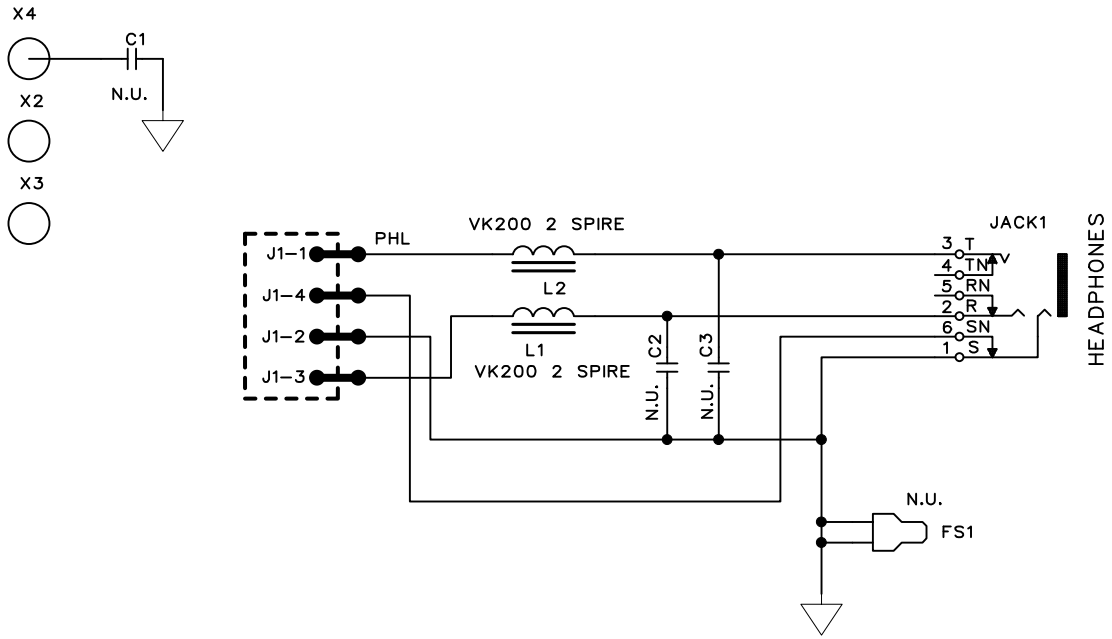

DRAWN NO. KID-A002155		KORG
DRAWN M.PALOMBINI	DATE 05/02/08	TITLE KIP-2155 PHONE BOARD
		SIZE / SHEET / OF SHEETS

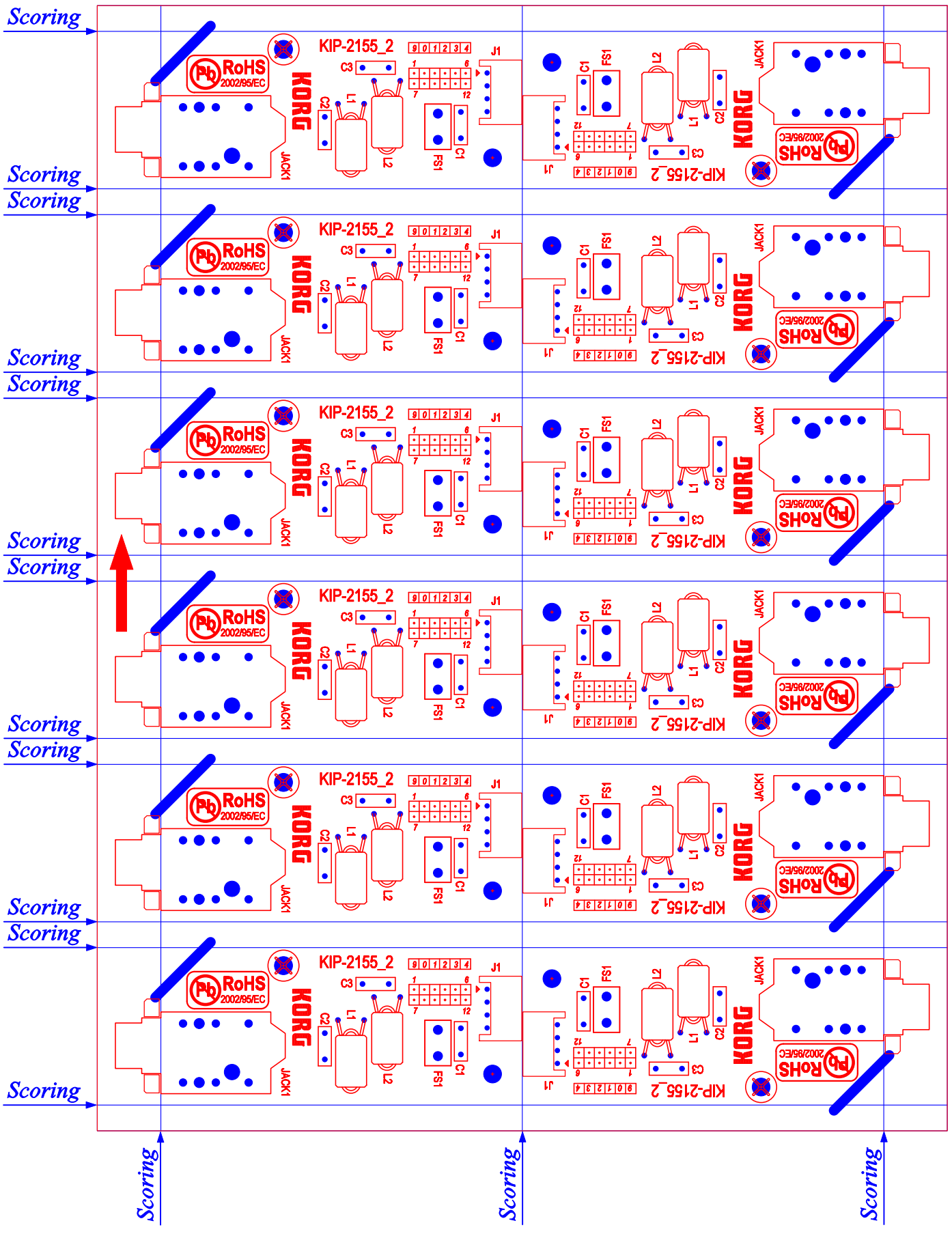

Material: CEM-1
Laminate Thickness: 1,6mm
Copper Base Thickness: min 35u
Surface Finishing: OSP (Rame Passivato)
N° Layer: 1

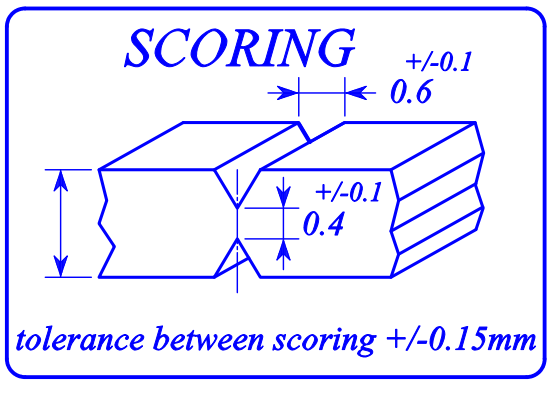

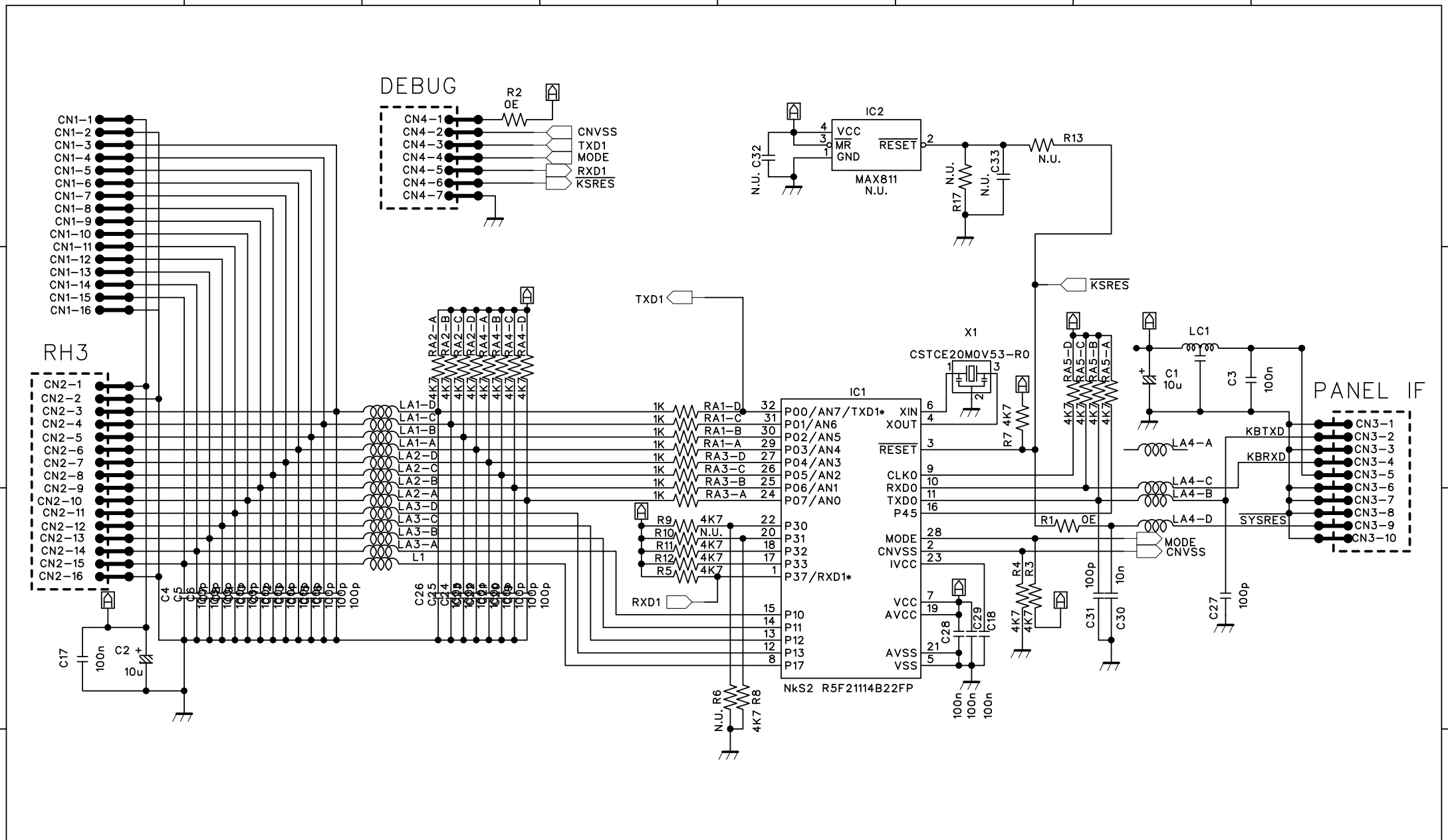

MARK	REVISION REASON	DATE	REVISED BY
△			
△			
△			
△			
△			

DRAWN BY	DESIGNED BY	CHECKED BY	MODEL
			TITLE: Keyboard IF
KORG	DRAWING NO. KOD-A002161		DATE 22/04/2009

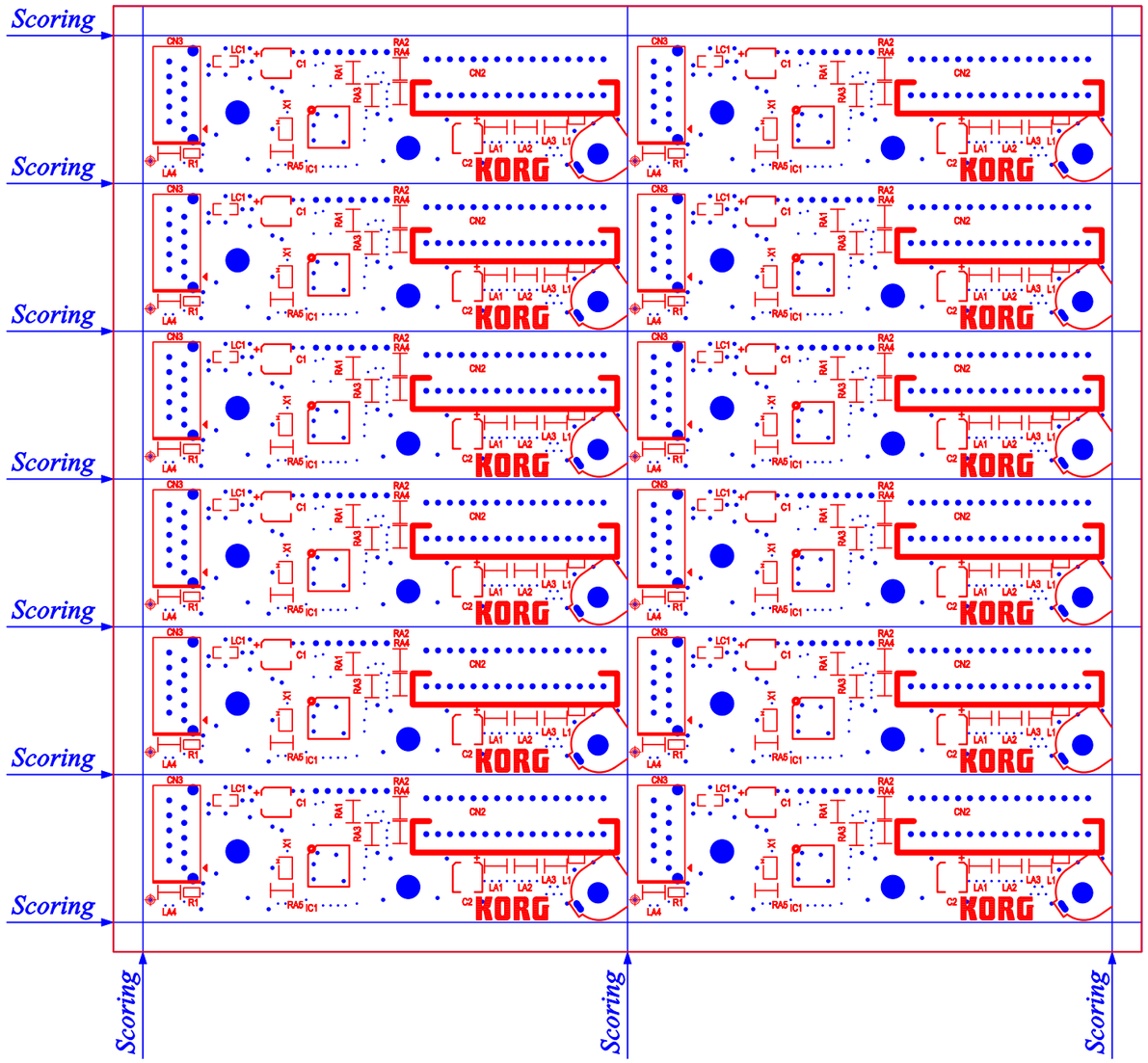

Material: FR4
Laminate Thickness: 1,6mm
Copper Base+Finishing Thickness: min 35u
Hole Wall Thickness: min 20u
Surface Finishing: Chemical Gold
N° Layer: 2

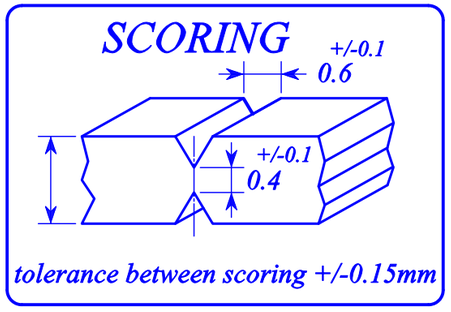

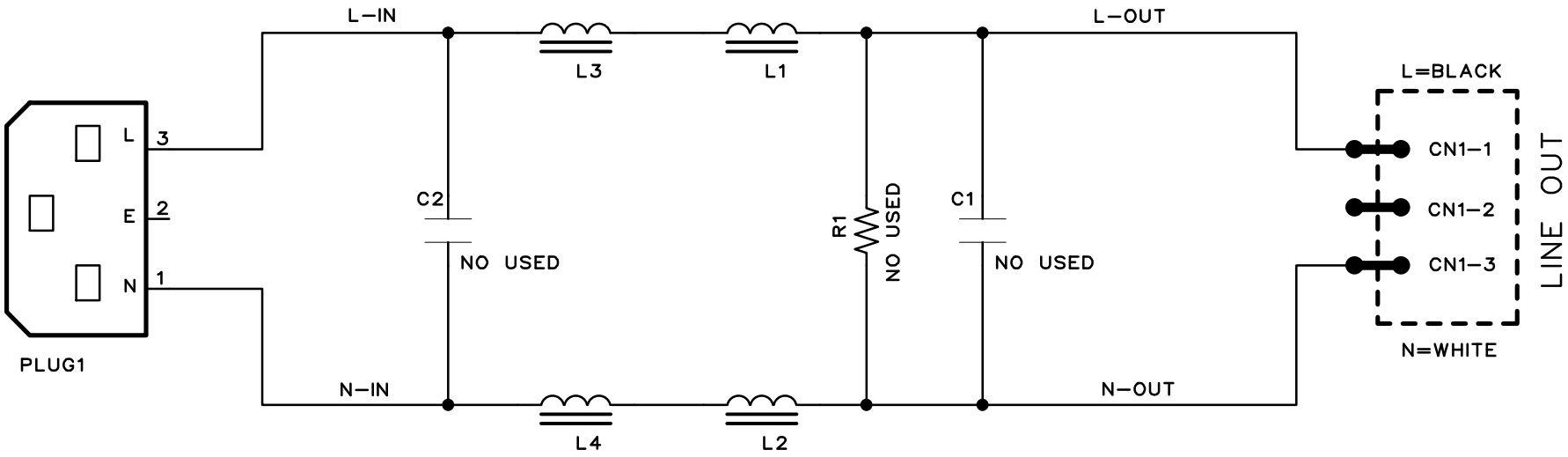

DRAWN NO. KID-A002125		KORG	
DRAWN	DATE 20/09/05	TITLE LINE AND AC FILTER KIP2xxx	
		SIZE	SHEET OF SHEETS

Materials: CEM-1
Laminate Thickness: 1.6 mm
Copper Base Thickness: 35 um
Surface Finishing: OSP (Rame Passivato)

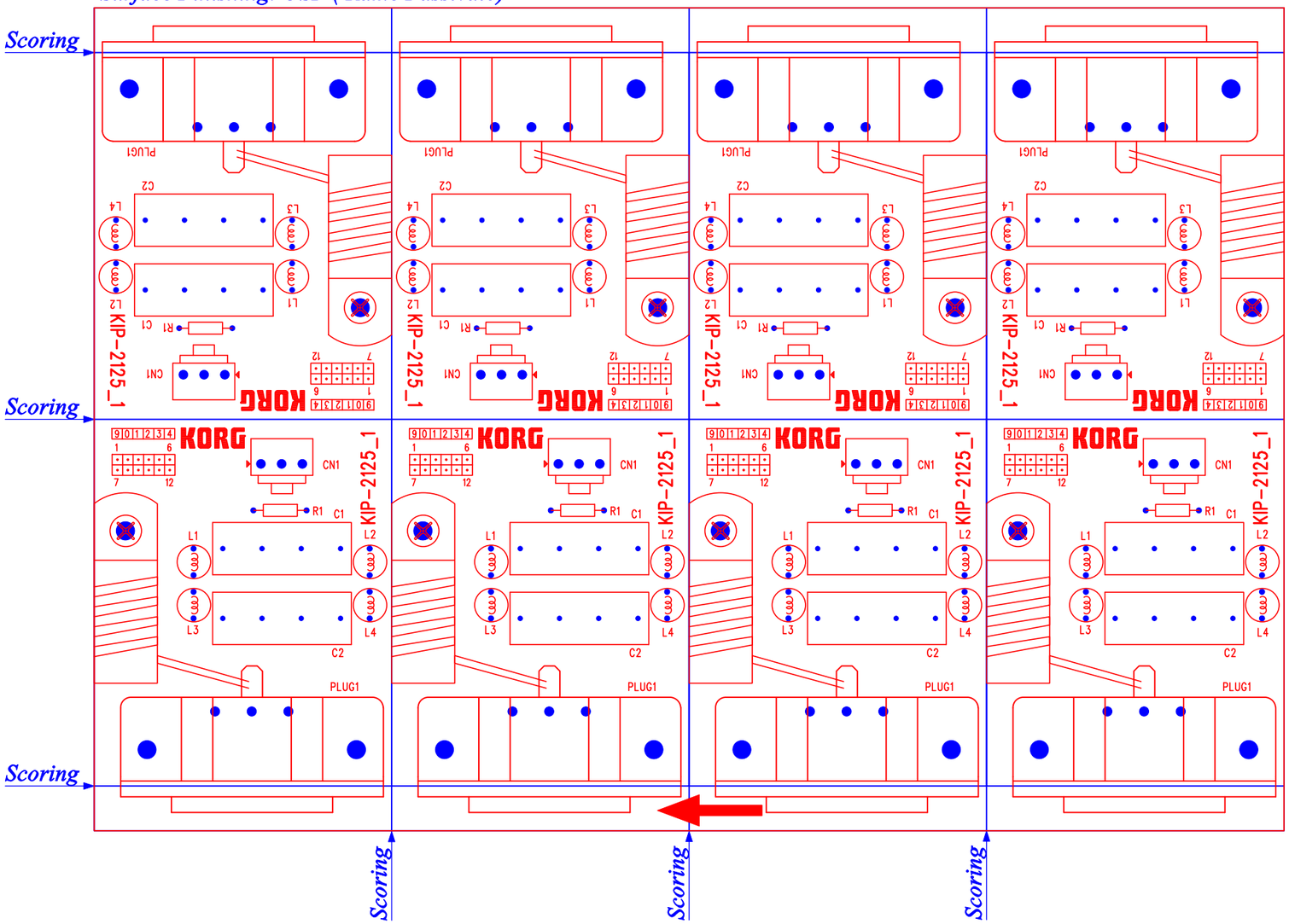

HARNESS MAIN LINE SV1

N°	CABLE Color/L.(mm)	START O		NOTE	END X		NOTE	CODE
		UN (MM)	CRIMP		UN (MM)	CRIMP		
1	AWG20-1672 BLACK	3.5	SVH-41 T-P1.1		10	SOLDER		
2	AWG20-1672 BLACK	10	SOLDER		3.5	5194T		
3	AWG20-1672 WHITE	3.5	SVH-41 T-P1.1		3.5	5194T		

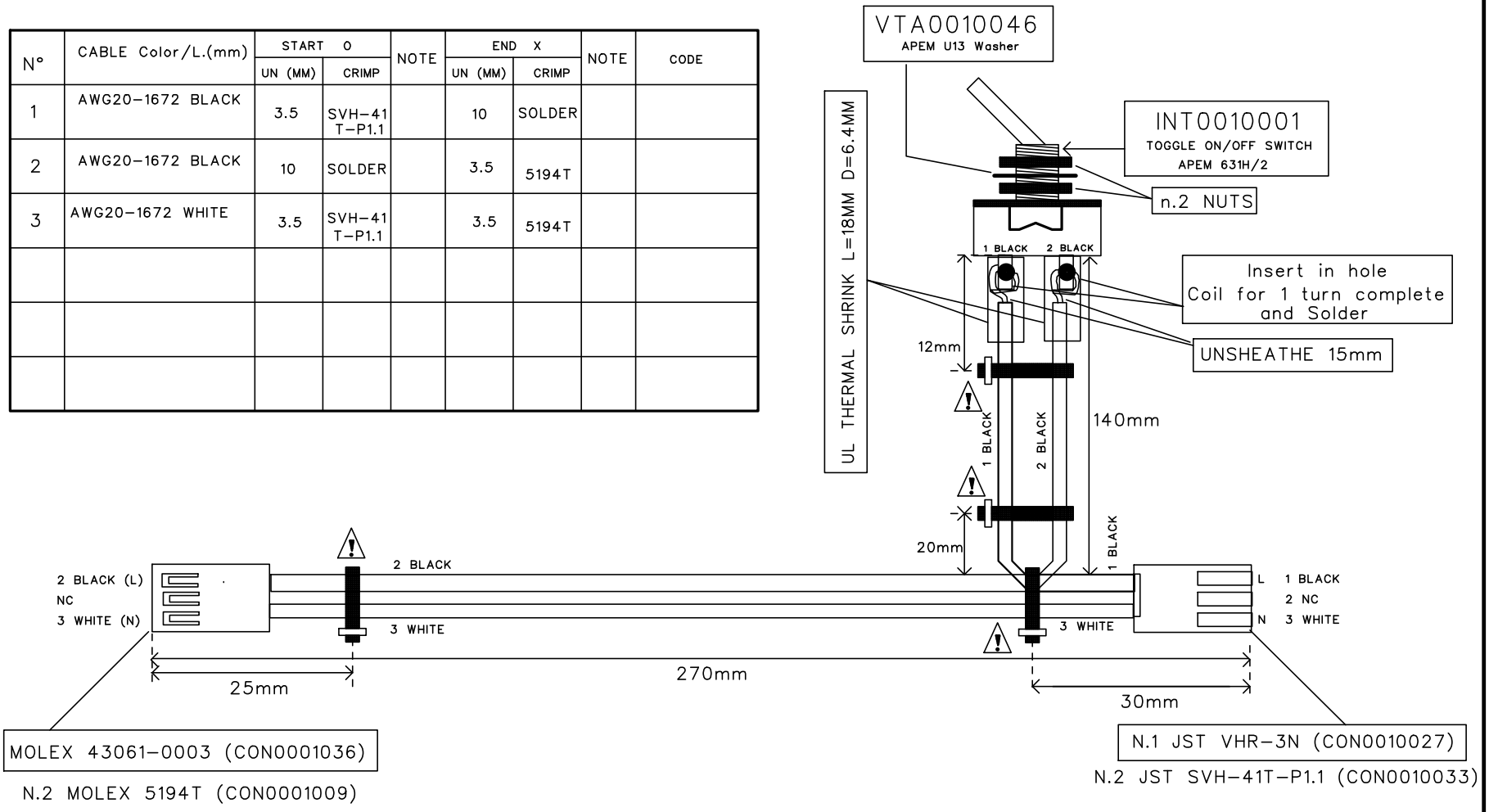

⚠ N.4 NYLON CABLE TIES: RICHCO WIT-E-018R (PLA0001062)

DATE: 24/06/'09	REV.5	KORG HARNESS MAIN LINE SV1 CODE:CAV0010047
DRAW.: Queirolo		
		KID-0000353

HARNESS PT45C – I/O BOARD SV1

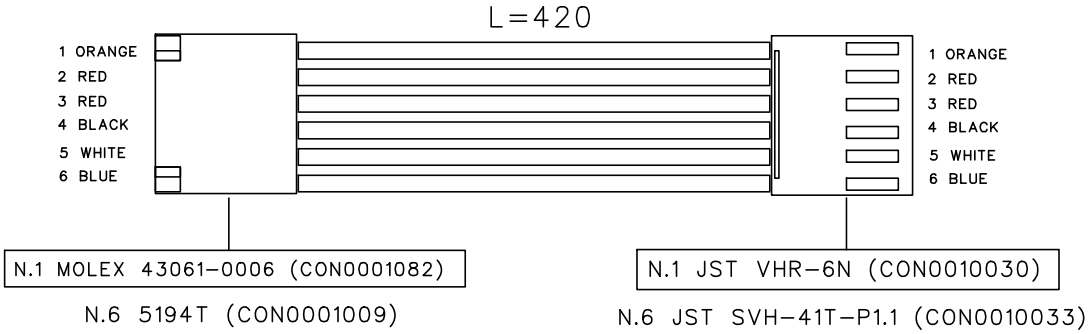

N°	CAVO Colore/L.(mm)	INIZIO O		NOTE	FINE X		NOTE	CODICE
		SP (MM)	INT.		SP (MM)	INT.		
1	AWG20-1007 ORANGE 420	3.5	5194T		3.5	SVH-41 T-P1.1		
2	AWG20-1007 RED 420	3.5	5194T		3.5	SVH-41 T-P1.1		
3	AWG20-1007 RED 420	3.5	5194T		3.5	SVH-41 T-P1.1		
4	AWG20-1007 BLACK 420	3.5	5194T		3.5	SVH-41 T-P1.1		
5	AWG20-1007 WHITE 420	3.5	5194T		3.5	SVH-41 T-P1.1		
6	AWG20-1007 BLUE 420	3.5	5194T		3.5	SVH-41 T-P1.1		

KORG

DATE: 03/07/'08

DRAW.: Queirolo

HARNESS PT45C – I/O BOARD SV1

CODE:CAV0010048

KID-0000354

HARNESS MB SUPPLY SV1

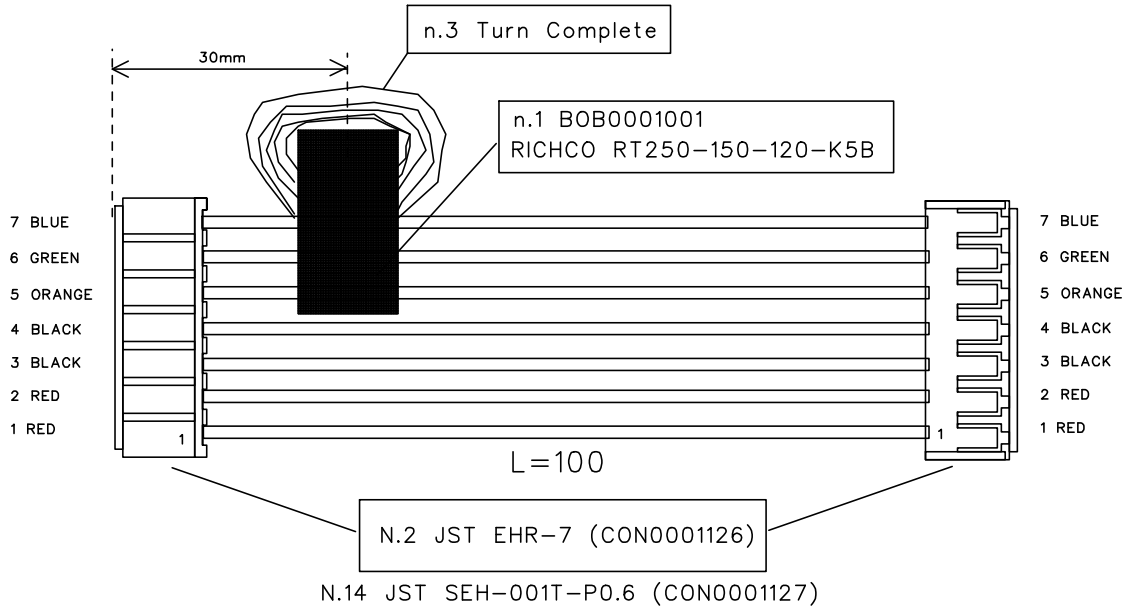

N°	CAVO Colore/L.(mm)	INIZIO O		NOTE	FINE X		NOTE	CODICE
		SP (MM)	INT.		SP (MM)	INT.		
1	AWG22-1007 RED 100	2.3	SEH-001T-P0.6		2.3	SEH-001T-P0.6		
2	AWG22-1007 RED 100	2.3	SEH-001T-P0.6		2.3	SEH-001T-P0.6		
3	AWG22-1007 BLACK 100	2.3	SEH-001T-P0.6		2.3	SEH-001T-P0.6		
4	AWG22-1007 BLACK 100	2.3	SEH-001T-P0.6		2.3	SEH-001T-P0.6		
5	AWG22-1007 ORANGE 250	2.3	SEH-001T-P0.6		2.3	SEH-001T-P0.6		
6	AWG22-1007 GREEN 250	2.3	SEH-001T-P0.6		2.3	SEH-001T-P0.6		
7	AWG22-1007 BLUE 250	2.3	SEH-001T-P0.6		2.3	SEH-001T-P0.6		

		KORG
DATE: 04/02/'09	REV.2	HARNESS MB SUPPLY SV1
DRAW.: Queirolo		CODE:CAV0010049
		KID-0000355

HARNESS HEAD PHONE SV1

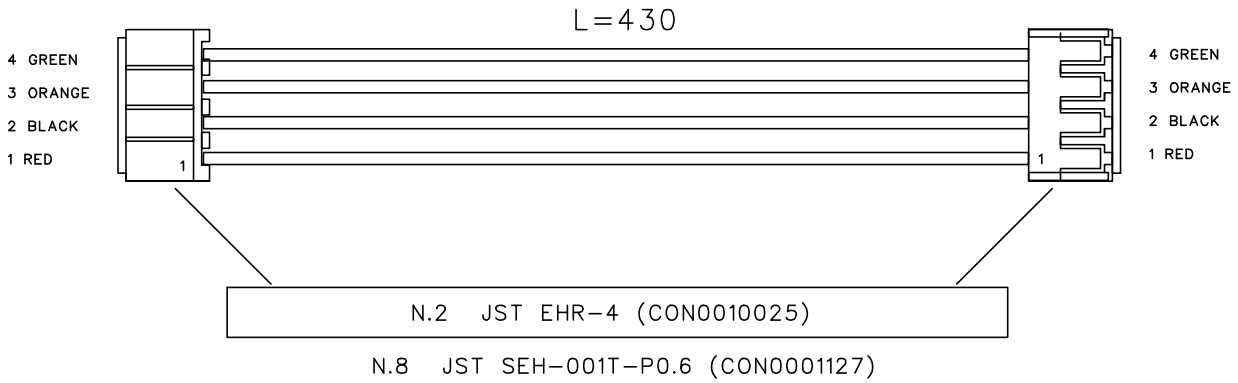

N°	CAVO Colore/L.(mm)	INIZIO O		NOTE	FINE X		NOTE	CODICE
		SP (MM)	INT.		SP (MM)	INT.		
1	AWG22-1007 RED 430	2.3	SEH-001T-P0.6		2.3	SEH-001T-P0.6		
2	AWG22-1007 BLACK 430	2.3	SEH-001T-P0.6		2.3	SEH-001T-P0.6		
3	AWG22-1007 ORANGE 430	2.3	SEH-001T-P0.6		2.3	SEH-001T-P0.6		
4	AWG22-1007 GREEN 430	2.3	SEH-001T-P0.6		2.3	SEH-001T-P0.6		

KORG

DATE: 01/08/'08 REV.1

DRAW.: Queirolo

HARNESS HEAD PHONE SV1
CODE:CAV0010050

KID-0000356

HARNESS TUBE SOCKET SV1

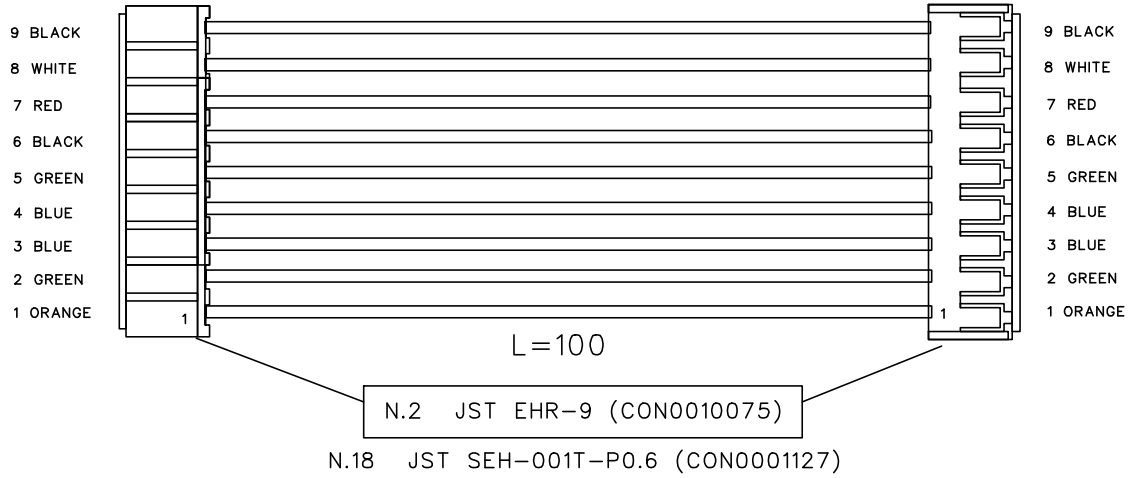

N°	CAVO Colore/L.(mm)	INIZIO O		NOTE	FINE X		NOTE	CODICE
		SP (MM)	INT.		SP (MM)	INT.		
1	AWG22-1007 ORANGE 100	2.3	SEH-001T-P0.6		2.3	SEH-001T-P0.6		
2	AWG22-1007 GREEN 100	2.3	SEH-001T-P0.6		2.3	SEH-001T-P0.6		
3	AWG22-1007 BLUE 100	2.3	SEH-001T-P0.6		2.3	SEH-001T-P0.6		
4	AWG22-1007 BLUE 100	2.3	SEH-001T-P0.6		2.3	SEH-001T-P0.6		
5	AWG22-1007 GREEN 100	2.3	SEH-001T-P0.6		2.3	SEH-001T-P0.6		
6	AWG22-1007 BLACK 100	2.3	SEH-001T-P0.6		2.3	SEH-001T-P0.6		
7	AWG22-1007 RED 100	2.3	SEH-001T-P0.6		2.3	SEH-001T-P0.6		
8	AWG22-1007 WHITE 100	2.3	SEH-001T-P0.6		2.3	SEH-001T-P0.6		
9	AWG22-1007 BLACK 100	2.3	SEH-001T-P0.6		2.3	SEH-001T-P0.6		

KORG

DATE: 01/08/'08 REV1

DRAW.: Queirolo

HARNESS TUBE SOCKET SV1
CODE:CAV0010051

KID-0000357

HARNESS VOLUME SV1

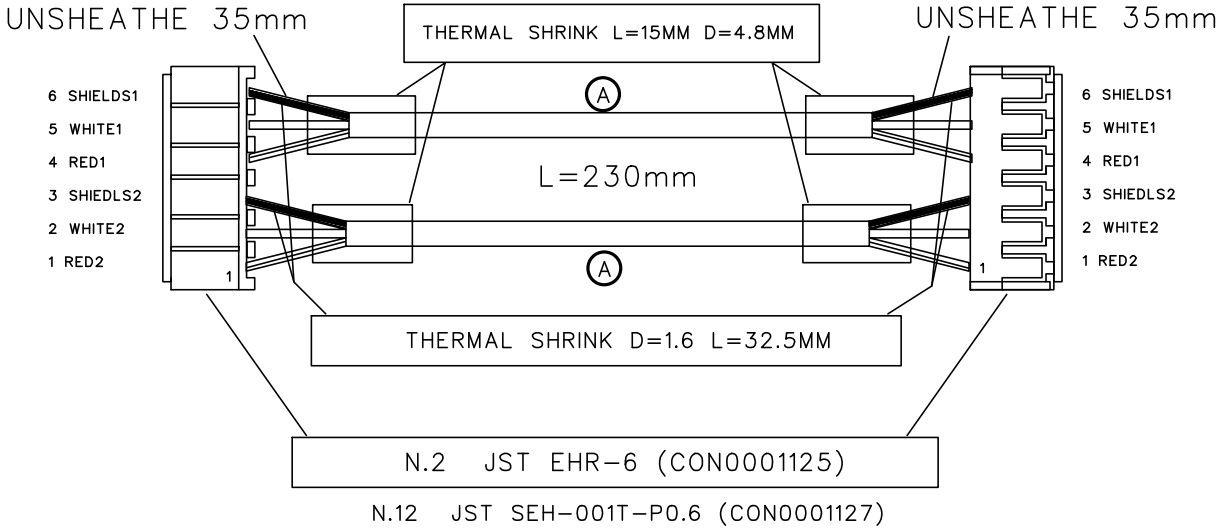

N.12 JST SEH-001T-P0.6 (CON0001127)

N°	CAVO Colore/L.(mm)	INIZIO O		NOTE	FINE X		NOTE	CODICE
		SP (MM)	INT.		SP (MM)	INT.		
1	RED 2/ 230	2.3	SEH-00 1T-P0.6		2.3	SEH-00 1T-P0.6		
2	WHITE 2/ 230	2.3	SEH-00 1T-P0.6		2.3	SEH-00 1T-P0.6		
3	SHIELDS 2/ 230	–	SEH-00 1T-P0.6		–	SEH-00 1T-P0.6		
4	RED 1/ 230	2.3	SEH-00 1T-P0.6		2.3	SEH-00 1T-P0.6		
5	WHITE 1/ 230	2.3	SEH-00 1T-P0.6		2.3	SEH-00 1T-P0.6		
6	SHIELDS 1/ 230	–	SEH-00 1T-P0.6		–	SEH-00 1T-P0.6		

(A) –CABLE: SUMITOMO AWG24-x2-FRPEFXSV
AWM2791 80°C VW-1SC

KORG

DATE: 03/07/'08

DRAW.: Queirolo

HARNESS VOLUME SV1
CODE:CAV0010052

KID-0000358

HARNESS USB SV1

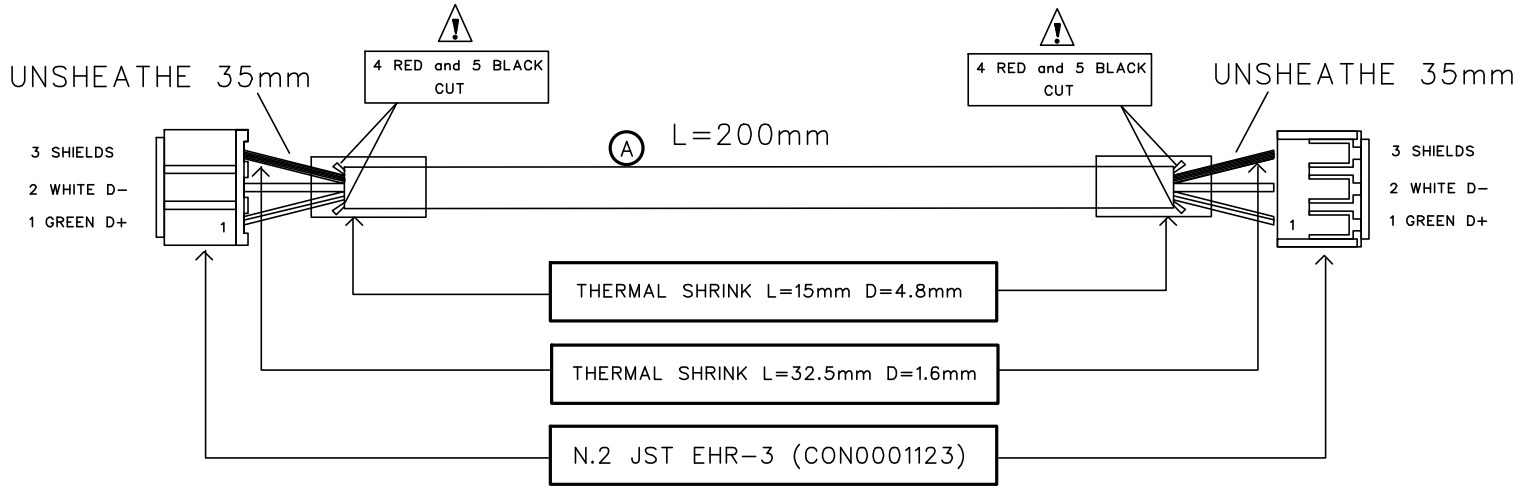

N°	CAVO Colore/L.(mm)	INIZIO O		NOTE	FINE X		NOTE	CODICE
		SP (MM)	INT.		SP (MM)	INT.		
1	GREEN 200	2.3	SEH−00 1T−P0.6		2.3	SEH−00 1T−P0.6		
2	WHITE 200	2.3	SEH−00 1T−P0.6		2.3	SEH−00 1T−P0.6		
3	SHIELDS 200	2.3	SEH−00 1T−P0.6		2.3	SEH−00 1T−P0.6		
4	RED 200	−			−		⚠	
5	BLACK 200	−			−		⚠	

− N.6 JST SEH−001T−P0.6 (CON0001127)

A − CABLE: USB 2.0 HS CABLE (480Mbit/sec)
28AWGx1P+24AWGx2C 80°C 30V
VW−1 UL AWM 2725 High Speed
CABLETECH TECHNOLOGY

		KORG
DATE: 02/04/'09		HARNESS USB SV1
DRAW.: Queirolo	REV.:1	CODE:CAV0010053
		KID−0000359

HARNESS FRONT PANEL EARTH

FAST-ON UL/CSA APPROVED

N°	CABLE Color/L.(mm)	START O		NOTE	END X		NOTE	CODICE
		SP (MM)	INT.		SP (MM)	INT.		
1	AWG16-1007 Y.G./120	6	FASTON 4.2mm		6	FASTON 6.3mm		

		KORG
DATE: 05/02/'09	REV.2	HARNESS FRONT PANEL EARTH
DRAW.: Queirolo		CODE:CAV0010054
		KID-0000360

HARNESS I/O – TUBE REACTOR SV1

FLAT CABE AWM 2651 12 WIRE

L= 210mm

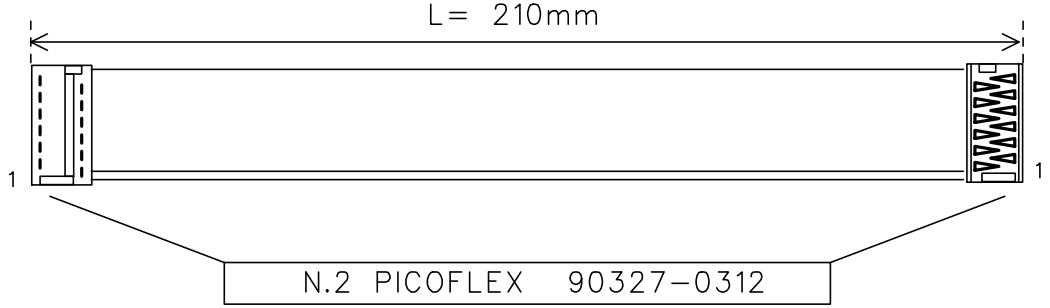

Opponent Assembling

		KORG Italy
DATE: 03/07/'08	DRAW.: Queirolo	HARNESS I/O – TUBE REACTOR SV1
Rev.: 12/12/'08		CODE:CAV0010055
		KID-0000361

HARNESS MB – RIGHT PAN. SV1

FLAT CABLE AWM 2651 12 WIRE

L= 130mm

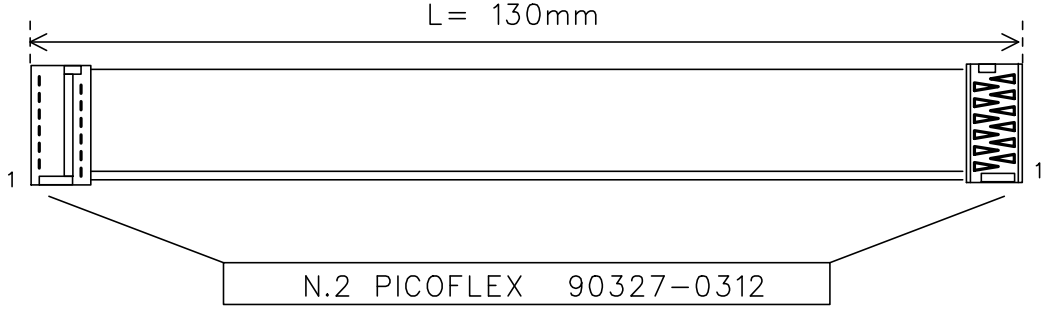

Opponent Assembling

		KORG Italy
DATE: 01/07/'08		HARNESS MB – RIGHT PAN. SV1
DRAW.: Queirolo		CODE:CAV0010056
		KID–0000362

HARNESS LEFT – RIGHT PAN. SV1

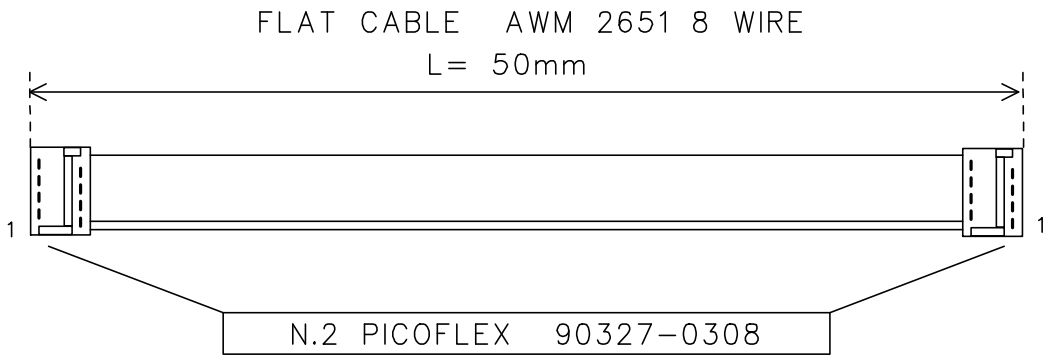

		KORG Italy
DATE: 01/07/'08		HARNESS LEFT– RIGHT PAN. SV1
DRAW: Queirolo		CODE.:CAV0010057
		KID–0000363

HARNESS MB – DIGITAL I/O SV1

FLAT CABLE AWM 2651 16 WIRE

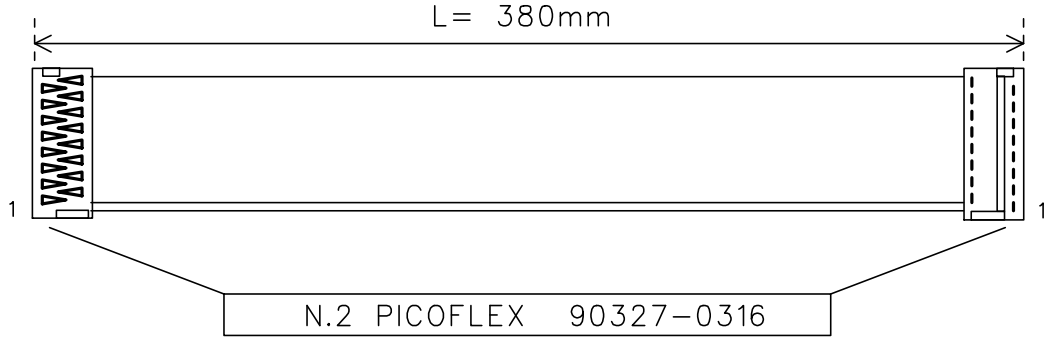

Opponent Assembling

		KORG Italy
DATE: 01/07/'08		HARNESS MB – DIGITAL I/O SV1 CODE:CAV0010058
		KID-0000364

HARNESS MB – ANALOG I/O SV1

FLAT CABLE AWM 2651 14 WIRE

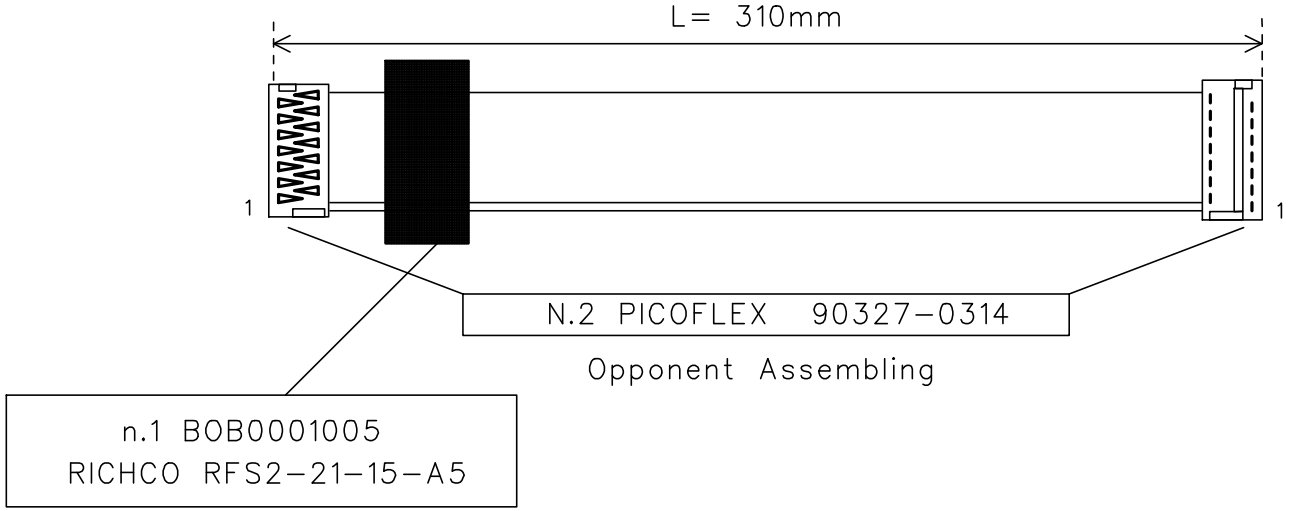

		KORG Italy
DATE: 21/11/'08		HARNESS MB – ANALOG I/O SV1
DRAW: Queirolo		CODE:CAV0010059
		KID-0000365

HARNESS MB – KEY_INT. SV1 73

FLAT CABLE AWM 2651 10 WIRE

L= 830mm

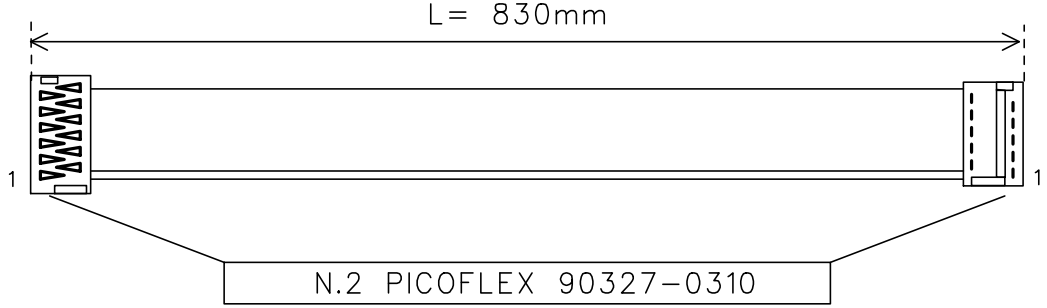

Opponent Assembling

		KORG Italy
DATE: 01/07/'08	Draw.: Queirolo	HARNESS MB – KEY_INT 73
Rev.: 12/12/'08		CODE.:CAV0010060
		KID–0000366

HARNESS KEYBOARD SV1

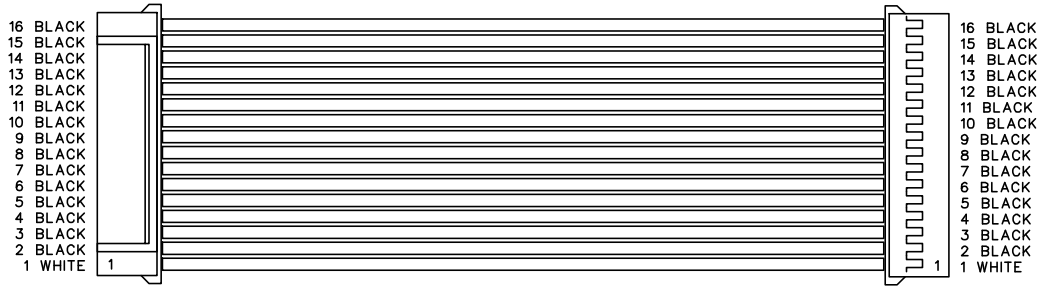

N.2 JST PHR-16 (CON0010092)

N.32 JST SPH-004T-P0.5S (CON0010055)

N°	CAVO Colore/L.(mm)	INIZIO O		NOTE	FINE X		NOTE	CODICE
		SP (MM)	INT.		SP (MM)	INT.		
1	AWG28 WHITE 90	2.3	SPH-00 T-P05S		2.3	SPH-00 T-P05S		
2/16	AWG28 BLACK 90	2.3	SPH-00 T-P05S		2.3	SPH-00 T-P05S		

ALL WIRE ARE 1007 STYLE

		KORG
DATE: 01/09/'08		HARNESS KEYBOARD SV1
DRAW.: Queirolo		CODE:CAV0010065
		KID-0000368

HARNESS KEYBOARD SV1 (88)

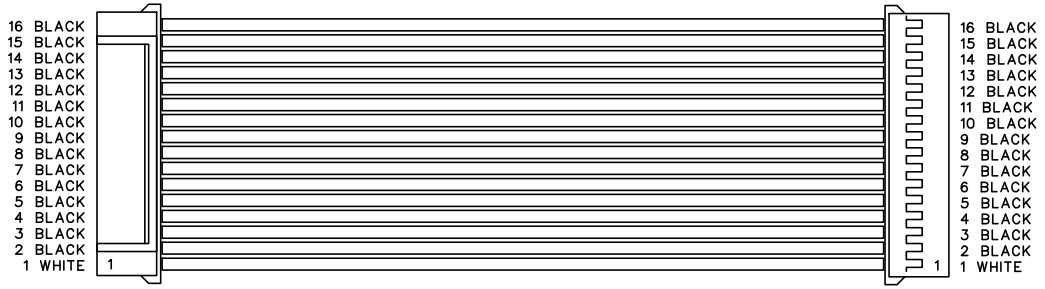

N.2 JST PHR-16 (CON0010092)

N.32 JST SPH-004T-P0.5S (CON0010055)

N°	CAVO Colore/L.(mm)	INIZIO O		NOTE	FINE X		NOTE	CODICE
		SP (MM)	INT.		SP (MM)	INT.		
1	AWG28 WHITE 50	2.3	SPH-00 T-P05S		2.3	SPH-00 T-P05S		
2/16	AWG28 BLACK 50	2.3	SPH-00 T-P05S		2.3	SPH-00 T-P05S		

KORG

DATE: 02/09/'08

DRAW.: Queirolo

HARNESS KEYBOARD SV1 (88)
CODE:CAV0010023

KID-0000369

HARNESS MB – KEY_INT. SV1 88

FLAT CABLE AWM 2651 10 WIRE

L= 950mm

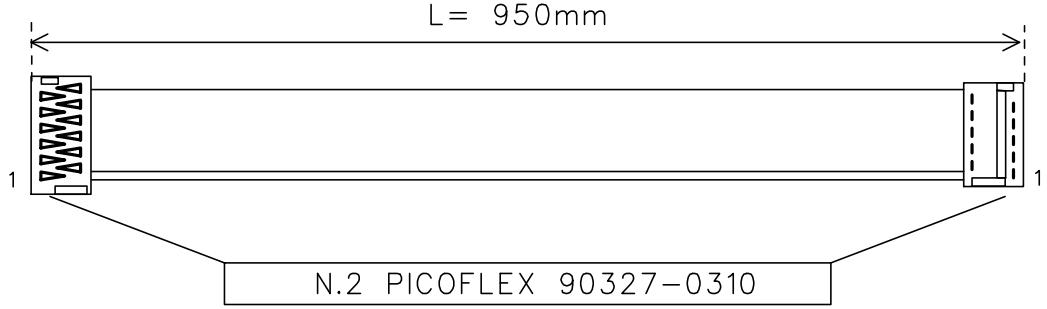

Opponent Assembling

		KORG Italy
DATE: 16/12/'08	Draw.: Queirolo	HARNESS MB – KEY_INT 88 CODE.:CAV0010066
		KID-0000372

HARNESS GROUND 140MM

FAST-ON UL/CSA APPROVED

N°	CABLE Color/L.(mm)	START O		NOTE	END X		NOTE	CODE
		SP (MM)	INT.		SP (MM)	INT.		
1	AWG16-1007 Y.G./140	6	FAST-ON 4.2mm		6	FAST-ON 4.2mm		

KORG

DATE: 10/02/'09	DRAW: Queirolo	HARNESS GROUND 140MM
REV.:		COD.:RIL0010067
		DIS.: KID-0000374

SV1 PART LIST

PART LIST ELECTRONIC COMPONENTS

CODE	DESCRIPTION	REFERENCE	Q. 88k	Q. 73k
GRA0002143	MAIN BOARD	D4	1	1
GRA0002144	IN/OUT BOARD	OB	1	1
GRA0002145	LEFT PANEL BOARD	CP2	1	1
GRA0002146	RIGHT PANEL BOARD	CP2	1	1
GRA0002153	VALVE AUDIO BOARD	TB	1	1
GRA0002154	VALVE SOCKET BOARD	TB	1	1
GRA0002155	HEADPHONE BOARD	PLS	1	1
GRA0002161	KEYBOARD INTERFACE	KB	1	1
GRA0002162	MAIN LINE FILTER	D5-73 D5-88	1	1
TRA0004003	POWER SWITCHING SUPPLY PT45C	POS	1	1

PART LIST MAIN BOARD GRA0002143

CODE	DESCRIPTION	Q.TY
CIN0002040	IC NJM4580M OP. AMP. SMD	3
CIN0002075	DSP TG01 MB87M4080PB-G	1
CIN0010072	USB DEVICE TRANCEIVER ISP1105W	1
CIN0002077	INT. SYST.PROC. MC9328MX1VM20	1
CIN0003043	SDRAM256Mb MT48LC16M16A2P-75:D	1
CIN0003047	IC NOR FLASH AT49BV163AT-70TU	1
CIN0004005	RESET GEN. 3.3V WITH INPUT	1
CIN0010000	CONV.D/A 24BIT CS4398-CZ H100	1
CIN0010029	NANDFLASH K9F2G08U0M-PCB0	1
CIN0010031	IC BUFFER, SN74LVC541APWR	2
CIN0010033	QUAD 2IN OR GATE SN74LVC32APWR	1
CIN0010034	HEX SCHM.TRIG.INV.SN74LV14APWR	1
CIN0010035	HEX.UNB. INV. SN74AHCU04PW	1
CIN0010037	SDRAM 64MB 16B K4S641632K-UC75	1
CIN0010038	QUAD2IN AND GATE SN74ALVC08PWR	1
CIN0010047	1.2A ADJ DCDC CONV.TPS62040DGQ	1
CIN0010054	STEREO CODEC CS4271	1
CIN0010056	ONE GATE NOR SN74LVC1G02DCK	1
CINL010005	P2ROM MR26T51203L-10DTM03A	1
CINL010006	P2ROM MR26T51203L-10ETM03A	1
CINL010007	P2ROM MR26T51203L-10FTM03A	1
CINL010008	P2ROM MR26T51203L-10GTM03A	1
CON0001075	BLACK CON. PICOFLEX 12V P1.27	1
CON0001076	BLACK CON. PICOFLEX 16V P1.27	1
CON0010001	CON. M. V. PTH 2F.10V.1.27MM	1
CON0010016	VER.M.CON. PTH 1F 3V 2.5MM JST	1
CON0010035	VER.M.CON.PTH 1F 7V 2,5MM JST	1
CON0010091	BLACK CON.PICOFLEX 14V P1,27	1
QUA0006004	SMD QUARTZ HCM49 16MHz	1
QUA0006005	SMD QUARTZ HCM49 24.576MHz	1
QUA0006012	SMDQUARTZ PKG CM200S 32.768KHZ	1
TRS0002008	REG. 78L05(SOT89) 100MA SMD	1
TRS0010011	REG.LIN.SMD 2A ADJ LOW DROP	1
FUS0010000	POLYSW 0,75A 6V NANOSMDC075F	1
FEL0010070	GRA0002143 KTP TEST LABEL	1

D1-73 = **D**isassembly **1** (**73**keys) **D1-88** = **D**isassembly **1** (**88**keys) **D2** = **D**isassembly **2** **D3-73** = **D**isassembly **3** (**73**keys) **D3-88** = **D**isassembly **3** (**88**keys)
D4 = **D**isassembly **4** **D5-73** = **D**isassembly **5** (**73**keys) **D5-88** = **D**isassembly **5** (**88**keys) **CP1** = **C**ontrol **P**anel group **1**
CP2 = **C**ontrol **P**anel group **2** **CP3** = **C**ontrol **P**anel group **3** **CP4** = **C**ontrol **P**anel group **4**
PLS = **PL**astic **S**ide groups **KB** = **K**ey**B**oard group **OB** = **O**utput **B**oard group **POS** = **PO**wer **S**upply group **TB =** T**u**B**e** group **KBB** = **K**ey**B**oard **B**ase group

SV1 PART LIST

PART LIST IN/OUT BOARD GRA0002144

CODE	DESCRIPTION	Q.TY
CIN0002074	IC SN74LVC125A QUAD BUF. SMD	1
CIN0003011	SMD DUAL HEADPH.OP. AMP.	1
CIN0010027	IC PC410LENIP-OF, SOP6 OPTOIS.	1
CIN0010050	2CH OPAMP NE5532D/NJM5532M SO8	2
CON0001075	BLACK CON. PICOFLEX 12V P1.27	1
CON0001076	BLACK CON. PICOFLEX 16V P1.27	1
CON0001079	USB CONNECTOR	1
CON0005001	CIRCULAR 5-PIN DIN	2
CON0010015	VER.M.CON. PTH 1F 4V 2.5MM JST	1
CON0010016	VER.M.CON. PTH 1F 3V 2.5MM JST	1
CON0010017	VER.M.CON. PTH 1F 6V 2.5MM JST	1
CON0010022	VER.M.CON.PTH 1F 6V 3,96MM JST	1
CON0010035	VER.M.CON.PTH 1F 7V 2,5MM JST	1
CON0010058	STEREO 6.3MM JACK NRJ6HH	7
CON0010069	HORIZ. XLR MALE CON.LX-1601H-3	2
CON0010091	BLACK CON.PICOFLEX 14V P1,27	1
CSTS002144	PCB2L KIP2144 IN/OUT BOARD SV1	1
TRS0002001	NPN RES. TRANSISTOR DTC114EKA	2
TRS0002002	PNP RES. TRANSISTOR DTA114EKA	2
TRS0002004	SMD NPN TRANSISTOR 2SD2114KT146V	8
TRS0002016	TRANSISTOR PNP SMD BC808	1
TRS0005005	POS. REG. 1A +12 LM 7812	1
TRS0005006	NEG. REG. 1A -12 LM 7913	1
FEL0010071	GRA0002144 KTP TEST LABEL	1

PART LIST LEFT PANEL BOARD GRA0002145

CODE	DESCRIPTION	Q.TY
CIN0010052	LOGIC IC. SN74AHCT138PW SMD	2
CIN0010053	PSOC UC CYPR.CY8C24423A-24PVXI	1
CON0010000	CON. M. V. PTH 2F 8V 1.27MM	1
CON0010017	VER.M.CON. PTH 1F 6V 2.5MM JST	1
INT0010002	ENCODER 12 POSIT. PUSH SWITCH	5
INT0010003	ENCODER 16 POSITION	2
INT0010004	SWITCH SMD ALPS SKHMQLE010	4
LED0010007	AMBER LED SMD 1206 KINGBRIGHT	71
POT0010006	ROT. POT. 10K LOGx2 ALPS	1
TRS0002001	NPN RES. TRANSISTOR DTC114EKA	6
TRS0002013	PNP RES. TRANSISTOR DTB113EK	13

PART LIST RIGHT PANEL BOARD GRA0002146

CODE	DESCRIPTION	Q.TY
CIN0010052	LOGIC IC. SN74AHCT138PW SMD	2
CIN0010053	PSOC UC CYPR.CY8C24423A-24PVXI	1
CON0001075	BLACK CON. PICOFLEX 12V P1.27	1
CON0010000	CON. M. V. PTH 2F 8V 1.27MM	1
INT0010002	ENCODER 12 POSIT. PUSH SWITCH	4
INT0010003	ENCODER 16 POSITION	4
INT0010004	SWITCH SMD ALPS SKHMQLE010	16
LED0010007	AMBER LED SMD 1206 KINGBRIGHT	84
TRS0002001	NPN RES. TRANSISTOR DTC114EKA	6
TRS0002013	PNP RES. TRANSISTOR DTB113EK	17

D1-73 = **D**isassembly **1** (**73**keys) **D1-88** = **D**isassembly **1** (**88**keys) **D2** = **D**isassembly **2** **D3-73** = **D**isassembly **3** (**73**keys) **D3-88** = **D**isassembly **3** (**88**keys)
D4 = **D**isassembly **4** **D5-73** = **D**isassembly **5** (**73**keys) **D5-88** = **D**isassembly **5** (**88**keys) **CP1** = **C**ontrol **P**anel group **1**
CP2 = **C**ontrol **P**anel group **2** **CP3** = **C**ontrol **P**anel group **3** **CP4** = **C**ontrol **P**anel group **4**
PLS = **PL**astic **S**ide groups **KB** = **K**ey**B**oard group **OB** = **O**utput **B**oard group **POS** = **PO**wer **S**upply group **TB** = **T**u**B**e group **KBB** = **K**ey**B**oard **B**ase group

SV1 PART LIST

PART LIST VALVE AUDIO BOARD GRA0002153

CODE	DESCRIPTION	Q.TY
CIN0002032	CIRC.INT.SN74AHCT04D	1
CIN0010055	MAXIM_MAX361ESE	1
CIN0010071	OPAMP 2CH NJM2082M SO8	2
CON0001075	BLACK CON. PICOFLEX 12V P1.27	1
CON0010071	VERT. MALE CON JST B9B-EH-A	1
TRA0010000	AUDIO TRANSFORMER 2.2H/2.2H	1
TRS0002001	NPN RES. TRANSISTOR DTC114EKA	4
TRS0002002	PNP RES. TRANSISTOR DTA114EKA	2
TRS0002008	REG. 78L05(SOT89) 100MA SMD	1
TRS0010000	REG.LIN.-12V 0,5A NJM79M12	1
TRS0010001	REG.LIN.12V 0.5A 78M12	1
TRS0010012	TRANSISTOR LOW NOISE NPN SMD	2
TRX0010001	TRIMMER HORIZ.P5MM 4K7	1

PART LIST VALVE SOCKET BOARD GRA0002154

CODE	DESCRIPTION	Q.TY
LED0010010	YEL./AMBER LED 3MM L-7104SYC	1
TRS0010010	VALVE 12AX7	1
CON0010071	VERT. MALE CON JST B9B-EH-A	1
CON0010070	CER.NOVAL CON.FOR 9PINS VALVE	1

PART LIST HEADPHONE BOARD GRA0002155

CODE	DESCRIPTION	Q.TY
CON0010011	CON. M. O. PTH 1F 4V 2.5MM JST	1
CON0010058	STEREO 6.3MM JACK NRJ6HH	1

PART LIST KEYBOARD INTERFACE GRA0002161

CODE	DESCRIPTION	Q.TY
CON0010072	VER.M.CON.PTH 1F 16V 2MM JST	1
CON0010001	CON. M. V. PTH 2F.10V.1.27MM	1
CIN0010079	IC.SW/LED/KBD SC. R5F21114B22FP (Fw. Ver. 0X22)	1
QUA0010003	CER.RESON.SMD 20MHZ MURATA	1

PART LIST MAIN LINE FILTER GRA0002162

CODE	DESCRIPTION	Q.TY
BOB0005001	EMI SUPP. Coil	4
CON0010019	V.HEADER CON. PTH 1F 3V 3.96MM	1
INT0001013	3 POLE MAIN PLUG S-0714-1-F7	1
CAV0010061	HARNESS MAIN EARTH SV1	1
VTA8010024	ALUMINIUM RIVET D3 L8	1
FER0010128	L PW SOC. SUPPORT KIC-C000559	1
FER0010157	R PW SOC. SUPPORT KIC-C000591	1

D1-73 = **D**isassembly **1** (**73**keys) **D1-88** = **D**isassembly **1** (**88**keys) **D2** = **D**isassembly **2** **D3-73** = **D**isassembly **3** (**73**keys) **D3-88** = **D**isassembly **3** (**88**keys)
D4 = **D**isassembly **4** **D5-73** = **D**isassembly **5** (**73**keys) **D5-88** = **D**isassembly **5** (**88**keys) **CP1** = **C**ontrol **P**anel group **1**
CP2 = **C**ontrol **P**anel group **2** **CP3** = **C**ontrol **P**anel group **3** **CP4** = **C**ontrol **P**anel group **4**
PLS = **PL**astic **S**ide groups **KB** = **K**ey**B**oard group **OB** = **O**utput **B**oard group **POS** = **PO**wer **S**upply group **TB = T**u**B**e group **KBB** = **K**ey**B**oard **B**ase group

SV1 PART LIST

PART LIST PLASTIC COMPONENTS

CODE	DESCRIPTION	REFERENCE	Q. 88k	Q. 73k
PLA0001046	SMALL CABLE HOLDER	D5-73 D5-88 CP2 KB	11	9
PLA0001047	CABLE HOLDER	PLS	2	2
PLA0001057	FERRITE FIXING TIE		1	1
PLA0001062	CABLE TIE FCV-100 PAN TY	D4 OB	2	2
PLA0001130	CFCC-8-04A FLAT CABLE HOLDER	KB	2	2
PLA0001163	SV1 RUBBER FOOT	D1-73 D1-88	5	5
PLA0010086	TUBE COVER	CP1	1	1
PLA0010087	COVER LED BUTTON	CP4	8	8
PLA0010088	TRANSPARENT BUTTON	CP4	8	8
PLA0010090	S VINTAGE BUTTON	CP4	7	7
PLA0010091	VINTAGE BUTTON GL	CP4	12	12
PLA0010092	VINTAGE BUTTON	CP4	5	5
PLA0010093	ROTARY SW KNOB	CP1	6	6
PLA0010094	ROTARY ENC. KNOB	CP1	9	9
PLA0010095	GLASS SUPPORT RSW	CP4	6	6
PLA0010096	GLASS FOR RSW	CP4	12	12
PLA0010097	GLASS SUPPORT	CP4	9	9
PLA0010098	LED GLASS	CP4	9	9
PLA0010099	EXT.SOCKET PANEL	D5-73 D5-88	1	1
PLA0010100	MASTER VOL. KNOB	CP1	1	1
PLA0010119	TUBE PLASTIC COVER	TB	1	1
PLA0010120	LABEL(1)	CP4	1	1
PLA0010121	LABEL(2)	CP4	1	1
PLA0010122	LABEL(3)	CP4	1	1
PLA0010123	LABEL(4)	CP4	1	1
PLA0010124	LABEL(5)	CP4	1	1
PLA0010125	LABEL(6)	CP4	1	1
PLA0010126	LABEL(7)	CP4	1	1
PLA0010127	LABEL(8)	CP4	1	1
PLA0010128	NYLON SPACER 9.4mm SPLSN-6U	KB	2	2
PLA0010130	MUSIC STAND X-0792O-1		1	1
PLA0010134	SV1 REST HOLDER	D5-73 D5-88	2	2
PLA0010136	POLY BAG 0.055X152X270MM		1	1
PLA0010140	MUSIC STAND STOPPER		1	1
PLA0010145	LDPE BAG 30X450 TH.0.02 FOR MUSIC STOPPER		1	1
PLAL001013	R PLASTIC SIDE PANEL V0 SV1-73 PAINTED	PLS		1
PLAL001014	L PLASTIC SIDE PANEL V0 SV1-73 PAINTED	PLS		1
PLAL001017	L PLASTIC SIDE PANEL V0 SV1-88 PAINTED	PLS	1	
PLAL001018	R PLASTIC SIDE PANEL V0 SV1-88 PAINTED	PLS	1	

PART LIST RIGHT SIDE PANEL PLAL001013 (73keys)

CODE	DESCRIPTION	Q.TY
PLA0010102	R PLASTIC SIDE PANEL (ROUGH)	1

PART LIST LEFT SIDE PANEL PLAL001014 (73keys)

CODE	DESCRIPTION	Q.TY
PLA0010101	L PLASTIC SIDE PANEL (ROUGH)	1

D1-73 = **D**isassembly **1** (**73**keys) **D1-88** = **D**isassembly **1** (**88**keys) **D2** = **D**isassembly **2** **D3-73** = **D**isassembly **3** (**73**keys) **D3-88** = **D**isassembly **3** (**88**keys)
D4 = **D**isassembly **4** **D5-73** = **D**isassembly **5** (**73**keys) **D5-88** = **D**isassembly **5** (**88**keys) **CP1** = **C**ontrol **P**anel group **1**
CP2 = **C**ontrol **P**anel group **2** **CP3** = **C**ontrol **P**anel group **3** **CP4** = **C**ontrol **P**anel group **4**
PLS = **PL**astic **S**ide groups **KB** = **K**ey**B**oard group **OB** = **O**utput **B**oard group **POS** = **PO**wer **S**upply group **TB** = **T**u**B**e group **KBB** = **K**ey**B**oard **B**ase group

SV1 PART LIST

PART LIST LEFT SIDE PANEL PLAL001017 (88keys)

CODE	DESCRIPTION	Q.TY
PLA0010101	L PLASTIC SIDE PANEL (ROUGH)	1

PART LIST RIGHT SIDE PANEL PLAL001018 (88keys)

CODE	DESCRIPTION	Q.TY
PLA0010102	R PLASTIC SIDE PANEL (ROUGH)	1

PART LIST METAL COMPONENTS

CODE	DESCRIPTION	REFERENCE	Q. 88k	Q. 73k
FER0010124	EXT.SOC. SUPPORT	OB	1	1
FER0010125	METAL SUPPORT	OB	2	2
FER0010129	POWER SUPPORT	POS	1	1
FER0010155	MASTER VOL.KNOB	CP1	1	1
FER0010156	ROTARY SW KNOB	CP1	15	15
FER0010158	R PANEL SUPPORT	PLS	1	1
FER0010159	L PANEL SUPPORT	PLS	1	1
FERL001060	CONTROL PANEL 88	CP3	1	
FERL001061	FRONT BAR 88	D1-88	1	
FERL001062	REAR PROFILE AL 88	D5-88	1	
FERL001063	CONTROL PANEL 73	CP3		1
FERL001064	FRONT BAR 73	D1-73		1
FERL001065	REAR PROFILE AL 73	D5-73		1
FERL001067	L METAL SIDE PANEL	PLS	1	1
FERL001068	R METAL SIDE PANEL	PLS	1	1
FERL001069	SV-1 KORG LOGO	D5-73 D5-88	1	1

PART LIST CONTROL PANEL FERL001060 (88keys)

CODE	DESCRIPTION	Q.TY
FER0010137	CONTROL PANEL 88	1

PART LIST FRONT BAR FERL001061 (88keys)

CODE	DESCRIPTION	Q.TY
FER0010136	FRONT BAR 88 (ROUGH)	1
FER0010139	FRONT BAR PROFILE SV1 VINTAGE	kg 1,05

PART LIST REAR PROFILE FERL001062 (88keys)

CODE	DESCRIPTION	Q.TY
FER0010135	REAR ALLUMINUM PROFILE 88 (ROUGH)	1
FER0010138	ALUMINUM PROFILE SV1 VINTAGE	kg 3,1

PART LIST CONTROL PANEL FERL001063 (73keys)

CODE	DESCRIPTION	Q.TY
FER0010134	CONTROL PANEL 73	1

D1-73 = **D**isassembly **1** (**73**keys) **D1-88** = **D**isassembly **1** (**88**keys) **D2** = **D**isassembly **2** **D3-73** = **D**isassembly **3** (**73**keys) **D3-88** = **D**isassembly **3** (**88**keys)
D4 = **D**isassembly **4** **D5-73** = **D**isassembly **5** (**73**keys) **D5-88** = **D**isassembly **5** (**88**keys) **CP1** = **C**ontrol **P**anel group **1**
CP2 = **C**ontrol **P**anel group **2** **CP3** = **C**ontrol **P**anel group **3** **CP4** = **C**ontrol **P**anel group **4**
PLS = **PL**astic **S**ide groups **KB** = **K**ey**B**oard group **OB** = **O**utput **B**oard group **POS** = **PO**wer **S**upply group **TB = T**u**B**e group **KBB** = **K**ey**B**oard **B**ase group

SV1 PART LIST

PART LIST FRONT BAR FERL001064 (73keys)

CODE	DESCRIPTION	Q.TY
FER0010133	FRONT BAR ROUGH	1
FER0010139	FRONT BAR PROFILE SV1 VINTAGE	kg 0,85

PART LIST REAR PROFILE FERL001065 (73keys)

CODE	DESCRIPTION	Q.TY
FER0010132	REAR PROFILE ALLUMINUM ROUGH	1
FER0010138	ALUMINUM PROFILE SV1 VINTAGE	kg 2.65

PART LIST LEFT METAL SIDE PANEL FERL001067

CODE	DESCRIPTION	Q.TY
FER0010126	LEFT METAL SIDE PANEL	1

PART LIST RIGHT METAL SIDE PANEL FERL001068

CODE	DESCRIPTION	Q.TY
FER0010127	RIGHT METAL SIDE PANEL	1

PART LIST PACKAGING

CODE	DESCRIPTION	Q. 88k	Q. 73k
IMB0010036	SV1-73 C.BOARD BOX		1
IMB0010037	SV1-88 C.BOARD BOX	1	
IMB0010038	SV1 L CUSHION	1	1
IMB0010039	SV1 R CUSHION	1	1
IMB0010040	MS C.BOARD SHEET	1	1
IMB0010041	SV1-73 CARDBOARD		1
IMB0010042	SV1-73 EXP.RUBBER (BK)		1
IMB0010043	SV1-88 CARDBOARD	1	
IMB0010044	SV1-73 EXP.RUBBER (WH)		1
IMB0010045	SV1-88 EXP.RUBBER (BK)	1	
IMB0010046	SV1-88 EXP.RUBBER (WH)	1	
IMB0010047	ACC.PACKAGING	1	1
IMB0010057	SV1-73 POLY SHEET 05T*400*1800		1
IMB0010058	SV1-88 POLY SHEET 05T*400*2000	1	
IMB0010059	SV1-73 HDPE SHEET 0.015T*2000*1100		1
IMB0010060	SV1-88 HDPE SHEET 0.015T*2200*1100	1	
IMB0010061	X-07921 L PAD	4	

D1-73 = **D**isassembly **1** (**73**keys) **D1-88** = **D**isassembly **1** (**88**keys) **D2** = **D**isassembly **2** **D3-73** = **D**isassembly **3** (**73**keys) **D3-88** = **D**isassembly **3** (**88**keys)
D4 = **D**isassembly **4** **D5-73** = **D**isassembly **5** (**73**keys) **D5-88** = **D**isassembly **5** (**88**keys) **CP1** = **C**ontrol **P**anel group **1**
CP2 = **C**ontrol **P**anel group **2** **CP3** = **C**ontrol **P**anel group **3** **CP4** = **C**ontrol **P**anel group **4**
PLS = **PL**astic **S**ide groups **KB** = **K**ey**B**oard group **OB** = **O**utput **B**oard group **POS** = **PO**wer **S**upply group **TB = T**u**B**e group **KBB** = **K**ey**B**oard **B**ase group

SV1 PART LIST

PART LIST FELTS AND ELASTIC COMPONENTS

CODE	DESCRIPTION	REFERENCE	Q. 88k	Q. 73k
FEL0001018	DOUBLE ADHESIVE SIDE 3M 5mm	CP3	0,35	0,35
FEL0001029	ADHESIVE TAPE ART.389 3M 18mm	D2 PLS POS	0,5	0,4
FEL0001048	ALUMINIUM ADHESIVE TAPE 50X50	KBB	0,65	0,65
FEL0010026	HEADPHONE ADHESIVE LABEL WHITE	PLS	1	1
FEL0010049	RUBBER FOAM FOR TUBE	TB	1	1
FEL0010050	RATING SEAL FENS-S50/PAT1		1	1
FEL0010051	SHIPPING LABEL KL-08		2	2
FEL0010052	CAUTION/FCC LABEL		1	1
FEL0010053	LABEL INK		1	1
FEL0010059	GROUND LABEL	D4	1	1
FEL0010063	BOTTOM LABEL		1	1
FEL0010067	TUBE CAUTION LABEL	TB	1	1
FEL0010068	CABLE SUPPORT PLATE KHC-F40002	D2	1	1
FEL0010073	BLACK ADHESIVE FELT 610X6X0.7	CP2	2	2

PART LIST SCREWS

CODE	DESCRIPTION	REFERENCE	Q. 88k	Q. 73k
VTA8001010	SCREW 3X16 TFR HILO WHITE ZN.	CP1	4	4
VTA8001011	GROVER O 4mm	D5-73 D5-88 PLS POS	5	6
VTA8001019	SCREW 3x13 TSP PR BLACK	PLS	6	6
VTA8001031	SCREW 3MX6 TC BLACK	PLS	2	2
VTA8001032	SCREW M3X8 TC	POS	4	4
VTA8001037	SCREW 2.9X6.5TC SP SELFTHREAD.	D5-73 D5-88 CP2 KB OB TB	37	34
VTA8001038	SCREW 3X8 TC PR WHITE ZINC. SP	D4 D5-73 D5-88	34	32
VTA8001039	SCREW 2.9X9.5TC SLFTHREA.ZN SP	D5-73 D5-88	6	6
VTA8001048	WASHER 3X9X0.8 WHITE	D4	3	3
VTA8001050	SCREW M4X8 TC SELFTAPP. WHITE	D2-73 D2-88 D5-73 D5-88 PLS POS	6	6
VTA8001051	SCREW 3X13 TCPR BLACK	D5-73 D5-88	4	4
VTA8001068	SCREW 2.9X16 TC Zn	D5-73 D5-88	2	2
VTA8001087	SCREW 3.5X6.5 TC SELFTHREAD.SP	D1-73 D1-88	2	2
VTA8001093	SCREW 3.5x13 TC SELFTHREADING	D1-73 D1-88 PLS	21	21
VTA0010053	SCREW 3.5X20 TFR	D1-73 D1-88	15	13
VTA0010054	SCREW M5x20 TC WITH WASHERS	D1-73 D1-88	8	8
VTA0010055	SPACER FOR CONTROL PANEL	PLS	2	2

D1-73 = **D**isassembly **1** (**73**keys) **D1-88** = **D**isassembly **1** (**88**keys) **D2** = **D**isassembly **2** **D3-73** = **D**isassembly **3** (**73**keys) **D3-88** = **D**isassembly **3** (**88**keys)
D4 = **D**isassembly **4** **D5-73** = **D**isassembly **5** (**73**keys) **D5-88** = **D**isassembly **5** (**88**keys) **CP1** = **C**ontrol **P**anel group **1**
CP2 = **C**ontrol **P**anel group **2** **CP3** = **C**ontrol **P**anel group **3** **CP4** = **C**ontrol **P**anel group **4**
PLS = **PL**astic **S**ide groups **KB** = **K**ey**B**oard group **OB** = **O**utput **B**oard group **POS** = **PO**wer **S**upply group **TB =** T**uB**e group **KBB** = **K**ey**B**oard **B**ase group

SV1 PART LIST

PART LIST HARNESSES

CODE	DESCRIPTION	REFERENCE	Q. 88k	Q. 73k
CAV0010023	HARNESS KEYBOARD SV1-88	KB	1	
CAV0010047	HARNESS MAIN LINE SV1	CP1	1	1
CAV0010048	HARNESS PT45C - I/O BOARD SV1	OB	1	1
CAV0010049	HARNESS MB SUPPLY SV1	OB	1	1
CAV0010050	HARNESS HEAD PHONE SV1	PLS	1	1
CAV0010051	HARNESS TUBE SOCKET SV1	TB	1	1
CAV0010052	HARNESS VOLUME SV1	OB	1	1
CAV0010053	HARNESS USB SV1	OB	1	1
CAV0010054	HARNESS FRONT PANEL EARTH	POS	1	1
CAV0010055	HARNESS I/O - TUBE REACTOR SV1	TB	1	1
CAV0010056	HARNESS MB - RIGHT PAN. SV1	CP2	1	1
CAV0010057	HARNESS LEFT - RIGHT PAN. SV1	CP2	1	1
CAV0010058	HARNESS MB - DIGITAL I/O SV1	OB	1	1
CAV0010059	HARNESS MB - ANALOG I/O SV1	OB	1	1
CAV0010060	HARNESS MB - KEY_INT. SV1 73	D4		1
CAV0010065	HARNESS KEYBOARD SV1 73	KB		1
CAV0010066	HARNESS MB - KEY_INT. SV1 88	D4	1	
CAV0010067	HARNESS GROUND 140MM	PLS	2	2
RIL0001040	EURO MAIN CABLE		1	1

PART LIST OTHER COMPONENTS

CODE	DESCRIPTION	REFERENCE	Q. 88k	Q. 73k
LEG0010055	SV1-88 KEYBOARD W BASE	KB	1	
LEG0010056	SV1-73 KEYBOARD W BASE	KB		1
MAN0010024	MULTILINGUAL USER MANUAL SV1		1	1
MAN0010032	USER INSTRUCTION FOR MUSIC STOPPER		1	1
MSD0001007	SV1 CD DRIVER, OS & RES. MAN		1	1
TAS0010000	KEYBOARD 88K **order only every single component directly from KORG Inc. (Japan)**	KB	1	
TAS0010006	KEYBOARD 73K **order this code and every single component directly from KORG Inc. (Japan)**	KB		1
TAS0010008	PEDALE DAMPER DS2H		1	1

PART LIST KEYBOARD WOODEN BASE LEG0010055 (88keys)

CODE	DESCRIPTION	Q.TY
FEL0010072	CALIFORNIA 93120 COMPLIANT LABEL	1
LEG0010055	SV1-88 KEYBOARD W BASE	1
VTA0001039	SCREW 2.9X9.5TC SLFTHREA.ZN SP	6
VTA0010056	STAND BUSH	2

PART LIST KEYBOARD WOODEN BASE LEG0010056 (73keys)

CODE	DESCRIPTION	Q.TY
FEL0010072	CALIFORNIA 93120 COMPLIANT LABEL	1
LEG0010056	SV1-73 KEYBOARD W BASE	1
VTA0001039	SCREW 2.9X9.5TC SLFTHREA.ZN SP	6
VTA0010056	STAND BUSH	2

D1-73 = **D**isassembly **1** (**73**keys) **D1-88** = **D**isassembly **1** (**88**keys) **D2** = **D**isassembly **2** **D3-73** = **D**isassembly **3** (**73**keys) **D3-88** = **D**isassembly **3** (**88**keys)
D4 = **D**isassembly **4** **D5-73** = **D**isassembly **5** (**73**keys) **D5-88** = **D**isassembly **5** (**88**keys) **CP1** = **C**ontrol **P**anel group **1**
CP2 = **C**ontrol **P**anel group **2** **CP3** = **C**ontrol **P**anel group **3** **CP4** = **C**ontrol **P**anel group **4**
PLS = **PL**astic **S**ide groups **KB** = **K**ey**B**oard group **OB** = **O**utput **B**oard group **POS** = **PO**wer **S**upply group **TB** = **T**u**B**e group **KBB** = **K**ey**B**oard **B**ase group

Address
KORG ITALY S.p.A.
Via Cagiata, 85
I-60027 Osimo (An)
Italy

Web servers
www.korg.it
www.korg.net
www.korg.com
www.korgpa.com

© 2009 KORG Italy All Rights Reserved

PART NUMBER: MAN0002017 Printed in Italy, November 2009